REVIEWER NOTES

1. WATERLINE INFORMATION TO BE REVIEWED AND COORDINATED WITH TOWN DURING FINAL PLAN REVIEW PERIOD.

STATE OF VERMONT
AGENCY OF TRANSPORTATION

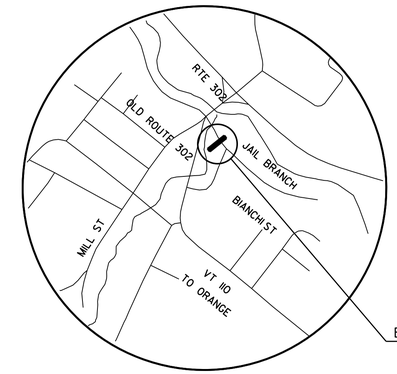

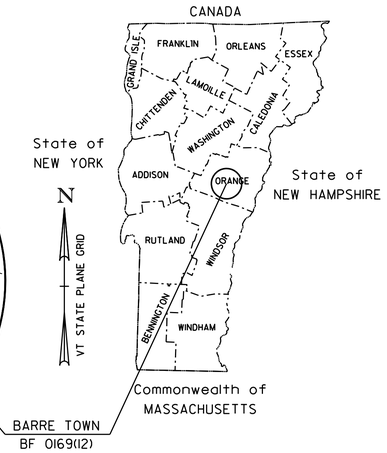

PROPOSED IMPROVEMENT
BRIDGE PROJECT
BARRE TOWN
COUNTY OF WASHINGTON
VT ROUTE 110 (WASHINGTON STREET), MAJOR COLLECTOR
BRIDGE NO. 21

PROJECT LOCATION: APPROXIMATELY 100 FEET SOUTHWEST OF THE JUNCTION WITH US ROUTE 302.

PROJECT DESCRIPTION: REPLACEMENT OF BRIDGE NO. 21 ON VT 110 IN BARRE TOWN, OVER JAIL BROOK.

LENGTH OF STRUCTURE: 48.0 FEET
LENGTH OF ROADWAY: 67.0 FEET
LENGTH OF PROJECT: 115.0 FEET

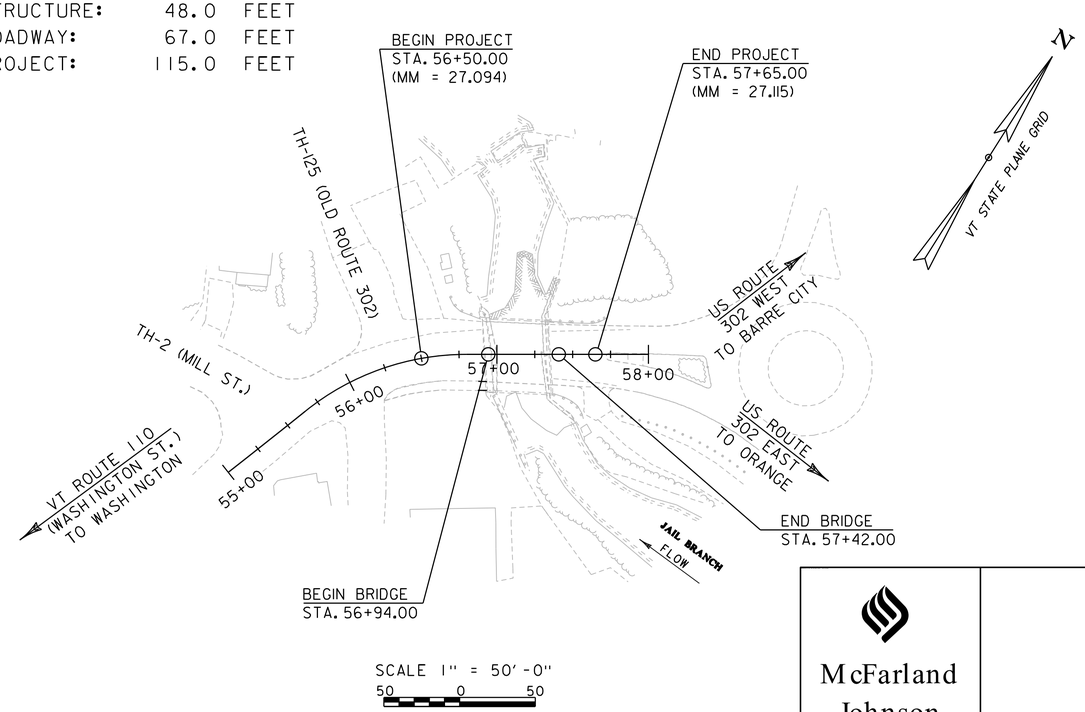

FINAL PLANS
1/14/2022

CONSTRUCTION IS TO BE CARRIED ON IN ACCORDANCE WITH THESE PLANS AND THE STANDARD SPECIFICATIONS FOR CONSTRUCTION DATED 2018, AS APPROVED BY THE FEDERAL HIGHWAY ADMINISTRATION ON APRIL 13, 2018 FOR USE ON THIS PROJECT, INCLUDING ALL SUBSEQUENT REVISIONS AND SUCH REVISED SPECIFICATIONS AND SPECIAL PROVISIONS AS ARE INCORPORATED IN THESE PLANS.

QUALITY ASSURANCE PROGRAM : LEVEL 2

SURVEYED BY : VTRANS
SURVEYED DATE : SEPTEMBER 18, 2018

DATUM
VERTICAL NAVD 88
HORIZONTAL NAD83 (96)

McFarland Johnson

HIGHWAY DIVISION, CHIEF ENGINEER
APPROVED _____ DATE _____

PROJECT MANAGER : MAHENDRA THILLIYAR P.E.

PROJECT NAME : BARRE TOWN
PROJECT NUMBER : BF 0169(12)

SHEET 1 OF 50 SHEETS

STATE OF VERMONT
AGENCY OF TRANSPORTATION

PRELIMINARY INFORMATION SHEET (BRIDGE)

Version
LRFD

INDEX OF SHEETS

PLAN SHEETS

1	TITLE SHEET
2	PRELIMINARY INFORMATION SHEET
3	TYPICAL BRIDGE SECTION SHEET
4	TYPICAL ROADWAY SECTION SHEET
5	CHANNEL & ABUTMENT EARTHWORK SECTIONS
6 - 7	PROJECT NOTES SHEET 1-2
8 - 11	QUANTITY SHEET 1-4
12	CONVENTIONAL SYMBOLOGY LEGEND
13	TIE SHEET
14	LAYOUT SHEET
15	PROFILE, BANKING & MATERIAL TRANSITION
16	REGIONAL DETOUR PLAN SHEET
17	TRAFFIC CONTROL PLAN SHEET
18	UTILITY RELOCATION SHEET
19	SIGNING & STRIPING PLAN
20	SIGN SUMMARY & TRAFFIC CONTROL NOTES
21	BORING LAYOUT SHEET
22 - 25	BORING LOGS SHEET 1-4
26	PLAN AND ELEVATION SHEET
27	TYPICAL BRIDGE SECTION AND DETAILS SHEET
28	SOLID SLAB DECK PLAN
29 - 31	SOLID SLAB BEAM DETAILS 1-3
32	BEARING DETAILS
33 - 34	APPROACH SLAB DETAILS 1-2
35	ABUTMENT NO. 1 PLAN & ELEVATION
36	ABUTMENT NO. 2 PLAN & ELEVATION
37	WINGWALL ELEVATIONS
38	ABUTMENT & WINGWALL SECTIONS
39	REINFORCING STEEL SCHEDULE
40 - 41	VT 110 CROSS SECTIONS 1-2
42 - 44	CHANNEL CROSS SECTIONS 1-3
45	EXISTING CONDITIONS SITE PLAN
46	R.O.W. LAYOUT SHEET
47	R.O.W. DETAIL SHEET
48 - 50	WATER MAIN DETAILS 1-3

STANDARDS LIST

B-71	STANDARD FOR RESIDENTIAL AND COMMERCIAL DRIVES	04-07-2020
C-2A	PORTLAND CEMENT CONCRETE SIDEWALK DRIVE ENTRANCES WITH SIDEWALK A	10-14-2005
C-3A	SIDEWALK RAMPS	04-07-2020
C-10	CURBING	02-11-2008
D-8	REINFORCED CONCRETE DROP INLET WITH PRECAST COVER & GRATE	01-03-2000
E-10	ROLLED EROSION CONTROL PRODUCT, TYPE I	04-07-2020
E-10	ROLLED EROSION CONTROL PRODUCT, TYPE I	04-07-2020
E-10	ROLLED EROSION CONTROL PRODUCT, TYPE I	04-07-2020
E-121	STANDARD SIGN PLACEMENT - CONVENTIONAL ROAD	08-08-1995
E-136B	STATE ROUTE MARKER SIGN DETAILS	08-08-1995
E-193	PAVEMENT MARKING DETAILS	08-18-1995
G-1	STEEL BEAM GUARDRAIL DETAILS (POST, DELINEATOR, TYPICALS)	03-10-2017
G-1D	STEEL BEAM GUARDRAIL DETAILS (END TERMINAL, ANCHOR, MEDIAN)	03-10-2017
G-19	GENERIC GRADING PLANS FOR GUARDRAIL END TERMINALS	10-02-2018
S-352A	BRIDGE RAILING, GALVANIZED STEEL TUBING/CONCRETE COMBINATION	04-07-2020
S-391	SNOW BARRIER	01-16-2014
S-391	SNOW BARRIER	01-16-2014
S-391	SNOW BARRIER	01-16-2014
T-1	TRAFFIC CONTROL GENERAL NOTES	04-25-2016
T-2	TRAFFIC SIGN GENERAL NOTES	04-07-2020
T-10	CONVENTIONAL ROADS CONSTRUCTION APPROACH SIGNING	08-06-2012
T-17	TRAFFIC CONTROL MISCELLANEOUS DETAILS	08-06-2012
T-30	CONSTRUCTION SIGN DETAILS	08-06-2012
T-40	DELINEATORS AND MILEPOSTS	01-02-2013
T-42	BRIDGE NUMBER PLAQUE	04-09-2014
T-45	SQUARE TUBE SIGN POST AND ANCHOR	01-02-2013
T-56	STANDARD SIGN PLACEMENT	10-26-2015

HIGHWAY SAFETY DETAIL SHEETS

HSD-621.04 STEEL BEAM GUARDRAIL GALVANIZED/25 FOOT RADIUS 6/9/2015

FINAL HYDRAULIC REPORT (PREPARED BY VTRANS)

HYDROLOGIC DATA

Date: 2/11/2021

DRAINAGE AREA : 38.9 sq. mi.
CHARACTER OF TERRAIN : Hilly to mountainous
STREAM CHARACTERISTICS : Straight to sinous with narrow floodplain
NATURE OF STREAMBED : Gravel and Cobble with ledge substrate

PEAK FLOW DATA - ANNUAL EXCEEDANCE PROBABILITY (AEP)

43% =	470 cfs	2% =	780 cfs
10% =	630 cfs	1% =	850 cfs
4% =	720 cfs	0.2% =	990 cfs

DATE OF FLOOD OF RECORD 10/01/1920
ESTIMATED DISCHARGE: 1,820 cfs
WATER SURFACE ELEV.: Unknown
NATURAL STREAM VELOCITY : @ 2% AEP = 10.2 fps +/-
ICE CONDITIONS : Moderate
DEBRIS: Low to Moderate
DOES THE STREAM REACH MAXIMUM HIGHWATER ELEV. RAPIDLY? No
IS ORDINARY RISE RAPID? No
IS STAGE AFFECTED BY UPSTREAM OR DOWNSTREAM CONDITIONS? Yes
IF YES, DESCRIBE: Tailwater is affected by downstream uncontrolled dam

WATERSHED STORAGE: 2% HEADWATERS:
UNIFORM:
IMMEDIATELY ABOVE SITE: X

EXISTING STRUCTURE INFORMATION

STRUCTURE TYPE: Single Span Concrete T-Beam
YEAR BUILT: 1930
CLEAR SPAN(NORMAL TO STREAM): 36.5 ft +/-
VERTICAL CLEARANCE ABOVE STREAMBED: 14.6 ft +/-
WATERWAY OF FULL OPENING: 420.4 sq. ft. +/-
DISPOSITION OF STRUCTURE: Replacement
TYPE OF MATERIAL UNDER SUBSTRUCTURE: See Borings

WATER SURFACE ELEVATIONS AT:

43% AEP =	1076.5 ft	VELOCITY =	10.1 fps
10% AEP =	1077.0 ft	"	11.1 fps
4% AEP =	1077.2 ft	"	11.6 fps
2% AEP =	1077.4 ft	"	11.9 fps
1% AEP =	1077.5 ft	"	12.2 fps

LONG TERM STREAMBED CHANGES: Unknown

IS THE ROADWAY OVERTOPPED BELOW 1% AEP: NO
FREQUENCY: N/A
RELIEF ELEVATION: N/A
DISCHARGE OVER ROAD @ 1% AEP: N/A

UPSTREAM STRUCTURE

TOWN: Barre DISTANCE: 2,000 ft +/-
HIGHWAY # : N/A STRUCTURE #: N/A
CLEAR SPAN: N/A CLEAR HEIGHT: N/A
YEAR BUILT: N/A FULL WATERWAY: N/A
STRUCTURE TYPE: East Barre Reservoir Dam

DOWNSTREAM STRUCTURE

TOWN: Barre DISTANCE: 2,310 ft +/-
HIGHWAY # : US 302 STRUCTURE #: 14
CLEAR SPAN: 202 ft CLEAR HEIGHT: Unknown
YEAR BUILT: 1959 FULL WATERWAY: Unknown
STRUCTURE TYPE: 3 Span Rolled Beam

PROPOSED STRUCTURE

STRUCTURE TYPE: Single Span

CLEAR SPAN(NORMAL TO STREAM): 45.0 ft +/-
VERTICAL CLEARANCE ABOVE STREAMBED: 16.5 ft
WATERWAY OF FULL OPENING: 553 sf

WATER SURFACE ELEVATIONS AT:

43% AEP =	1076.4 ft	VELOCITY=	10.1 fps
10% AEP =	1077.0 ft	"	11.2 fps
4% AEP =	1077.2 ft	"	11.8 fps
2% AEP =	1077.3 ft	"	12.2 fps
1% AEP =	1077.5 ft	"	12.6 fps

IS THE ROADWAY OVERTOPPED BELOW 1% AEP: NO
FREQUENCY: N/A
RELIEF ELEVATION: N/A
DISCHARGE OVER ROAD @ 1% AEP: N/A

BRIDGE LOW CHORD ELEVATION: 1085.9 ft +/-
FREEBOARD: @ 2% AEP = 8.6 ft +/-

SCOUR: N/A - Spread footings founded on ledge

REQUIRED CHANNEL PROTECTION: Stone Fill Type IV*

PERMIT INFORMATION

		DEPTH OR ELEVATION:
AVERAGE DAILY FLOW:	-	
ORDINARY LOW WATER:	-	-
ORDINARY HIGH WATER:	-	-

TEMPORARY BRIDGE REQUIREMENTS

STRUCTURE TYPE: N/A
CLEAR SPAN (NORMAL TO STREAM): N/A
VERTICAL CLEARANCE ABOVE STREAMBED: N/A
WATERWAY AREA OF FULL OPENING: N/A

ADDITIONAL INFORMATION

*E-Stone Type IV to be used for all in channel work

TRAFFIC MAINTENANCE NOTES

1. MAINTAIN TRAFFIC ON AN OFF SITE DETOUR.
2. TEMPORARY TRAFFIC SIGNALS ARE NOT REQUIRED.
3. PEDESTRIAN TRAFFIC MAINTAINED ON OFF SITE DETOUR.
4. BRIDGE CLOSURE DURATION OF 60-DAYS.

DESIGN VALUES

1. DESIGN LIVE LOAD		HL-93
2. FUTURE PAVEMENT	d_p:	0.0 INCH
3. DESIGN SPAN	L:	46.00 FT
4. MIN. MID-SPAN POS. CAMBER @ RELEASE (PRESTRESSED UNITS)	Δ:	1.10
5. PRESTRESSING STRAND (0.60 INCH DIAMETER - LOW RELAX)	f_y:	270 KSI
6. PRESTRESSED CONCRETE STRENGTH	f'_c:	8.0
7. PRESTRESSED CONCRETE RELEASE STRENGTH	f'_{ci}:	5.5
8. HIGH PERFORMANCE CONCRETE, CLASS PCD	f'_c:	4.0 KSI
9. HIGH PERFORMANCE CONCRETE, CLASS PCS	f'_c:	3.5 KSI
10. CONCRETE HIGH PERFORMANCE, CLASS SCC	f'_c:	- - -
11. CONCRETE, CLASS C	f'_c:	3.0 KSI
12. REINFORCING STEEL	f_y:	60 KSI
13. STRUCTURAL STEEL AASHTO M270	f_y:	50 KSI
14. NOMINAL BEARING RESISTANCE OF SOIL	q_n:	- - -
15. SOIL BEARING RESISTANCE FACTOR (REFER TO AASHTO LRFD)	ϕ:	- - -
16. NOMINAL BEARING RESISTANCE OF ROCK	q_n:	1200.0 KSF
17. ROCK BEARING RESISTANCE FACTOR (REFER TO AASHTO LRFD)	ϕ:	0.45
18. PILE RESISTANCE FACTOR	ϕ:	- - -
19. LATERAL PILE DEFLECTION	Δ:	- - -
20. BASIC WIND SPEED	V_{3s}:	- - -
21. MINIMUM GROUND SNOW LOAD	p_g:	- - -
22. SEISMIC DATA PGA : 8 %g	S_s:	18 %g
	S_1:	5 %g
23.		
24.		- - -
25.		
26.		

LRFR LOAD RATING FACTORS

LOADING LEVELS	TRUCK						
	H-20	HL-93	3S2	6 AXLE	3A. STR.	4A. STR.	5A. SEMI
TONNAGE	20	36	36	66	30	34.5	38
INVENTORY	1.55	1.25					
POSTING							
OPERATING	2	1.63	5.72	3	3.98	3.64	4.63
COMMENTS:							

TRAFFIC DATA

YEAR	ADT	DHV	% D	% T	ADTT
2023	4800	550	53	1.3	300
2043	5200	600	53	2	490

20 year ESAL for flexible pavement from 2023 to 2043 : 2050000
40 year ESAL for flexible pavement from 2023 to 2063 : 4968000
Design Speed : 35 mph

AS BUILT "REBAR" DETAIL

LEVEL I	LEVEL II	LEVEL III
TYPE:	TYPE:	TYPE:
GRADE:	GRADE:	GRADE:

PROJECT NAME: **Barre Town**
PROJECT NUMBER: **BF 0169(12)**

FILE NAME: **PI Sheet Builder_v008-20c.xls**
PROJECT LEADER: **D. Kull**
DESIGNED BY: **S. Lister/VTrans**
PRELIMINARY INFORMATION SHEET

PLOT DATE: 1/14/2022
DRAWN BY: **S. Merkwan**
CHECKED BY: **R. Joy**
SHEET 2 OF 50

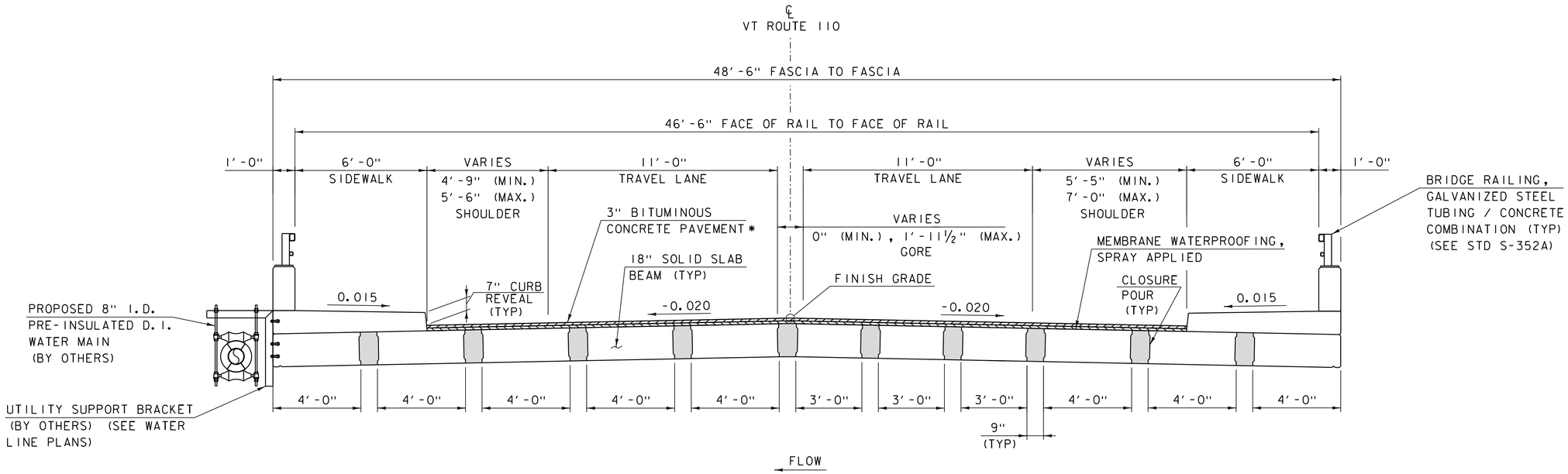

PROPOSED TYPICAL BRIDGE SECTION

SCALE: ⅜" = 1'-0"

* 1½" SPECIAL PROVISION (BITUMINOUS CONCRETE PAVEMENT, SMALL QUANTITY) TYPE IVB OVER
1½" SPECIAL PROVISION (BITUMINOUS CONCRETE PAVEMENT, SMALL QUANTITY) TYPE IVB

LEGEND

SPECIAL PROVISION (HIGH PERFORMANCE CONCRETE, RAPID SET)

McFarland Johnson

PROJECT NAME: BARRE TOWN	
PROJECT NUMBER: BF 0169(12)	
FILE NAME: zl2c576br_typ.dgn	PLOT DATE: 1/14/2022
PROJECT LEADER: D. KULL	DRAWN BY: S. MERKWAN
DESIGNED BY: D. WHITE	CHECKED BY: R. JOY
TYPICAL BRIDGE SECTION SHEET	SHEET 3 OF 50

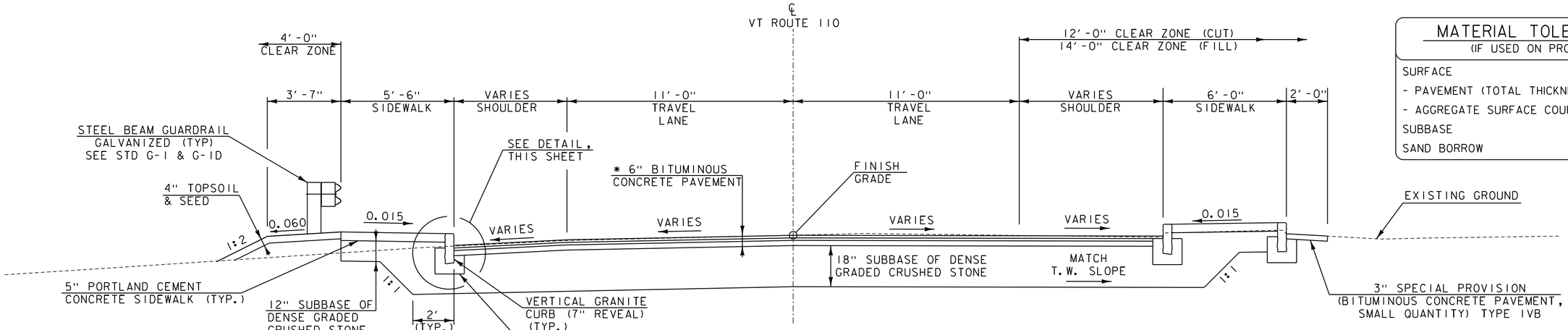

VERMONT ROUTE 110

SCALE 3/8" = 1'-0"

STA 56+35.00 TO STA 56+94.00

MATERIAL TOLERANCES

(IF USED ON PROJECT)

SURFACE	
- PAVEMENT (TOTAL THICKNESS)	+/- 1/4"
- AGGREGATE SURFACE COURSE	+/- 1/2"
SUBBASE	+/- 1"
SAND BORROW	+/- 1"

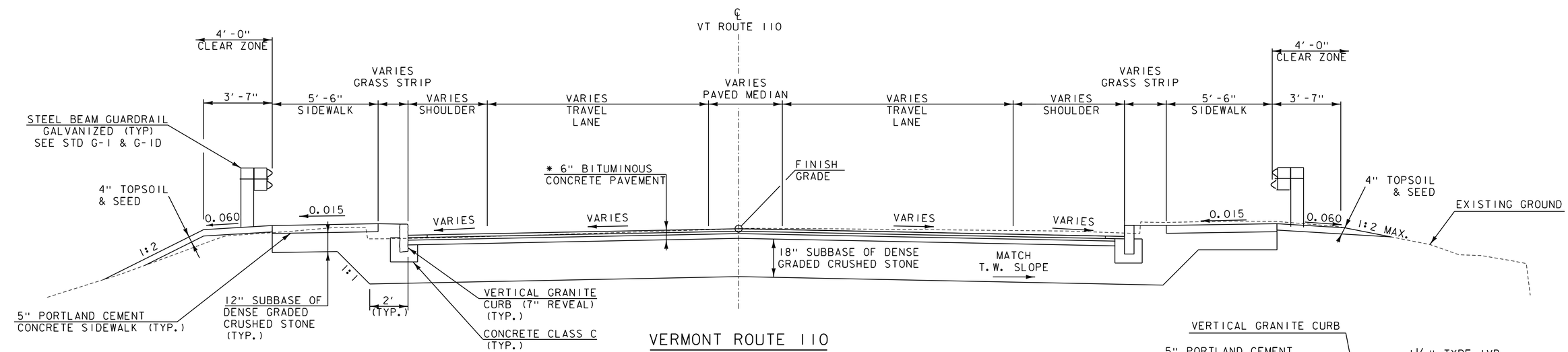

VERMONT ROUTE 110

SCALE 3/8" = 1'-0"

STA 57+42.00 TO STA 57+85.00

NOTE: TRAVEL WAY DIMENSIONING IS MEASURED PERPENDICULAR TO THE ALIGNMENT.

MATERIAL REQUIREMENTS

MATERIAL	THICKNESS	DESCRIPTION
WEARING COURSE #2	1 1/2"	SPECIAL PROVISION (BITUMINOUS CONCRETE PAVEMENT, SMALL QUANTITY) TYPE IVB
WEARING COURSE #1	1 1/2"	SPECIAL PROVISION (BITUMINOUS CONCRETE PAVEMENT, SMALL QUANTITY) TYPE IVB
BASE COURSE #1	3"	SPECIAL PROVISION (BITUMINOUS CONCRETE PAVEMENT, SMALL QUANTITY) TYPE IIS
EMULSIFIED ASPHALT	---	STANDARD SPECIFICATIONS TABLE 406.12A
SUBBASE	24"	SUBBASE OF DENSE GRADED CRUSHED STONE

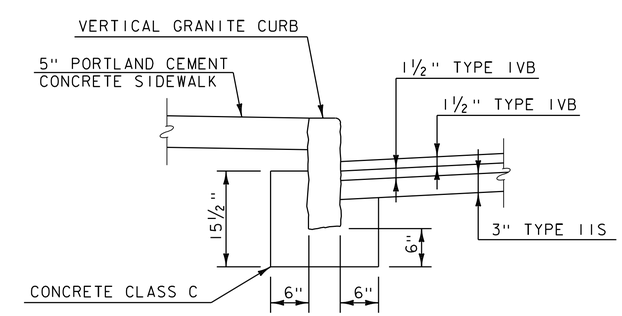

CURB AND SIDEWALK CONSTRUCTION

SCALE 1" = 1'-0"

McFarland Johnson

PROJECT NAME: BARRE TOWN	
PROJECT NUMBER: BF 0169(12)	
FILE NAME: z12c576typ.dgn	PLOT DATE: 1/14/2022
PROJECT LEADER: D. KULL	DRAWN BY: M. LOVETT
DESIGNED BY: S. LISTER	CHECKED BY: B. COLBURN
TYPICAL ROADWAY SECTION SHEET	SHEET 4 OF 50

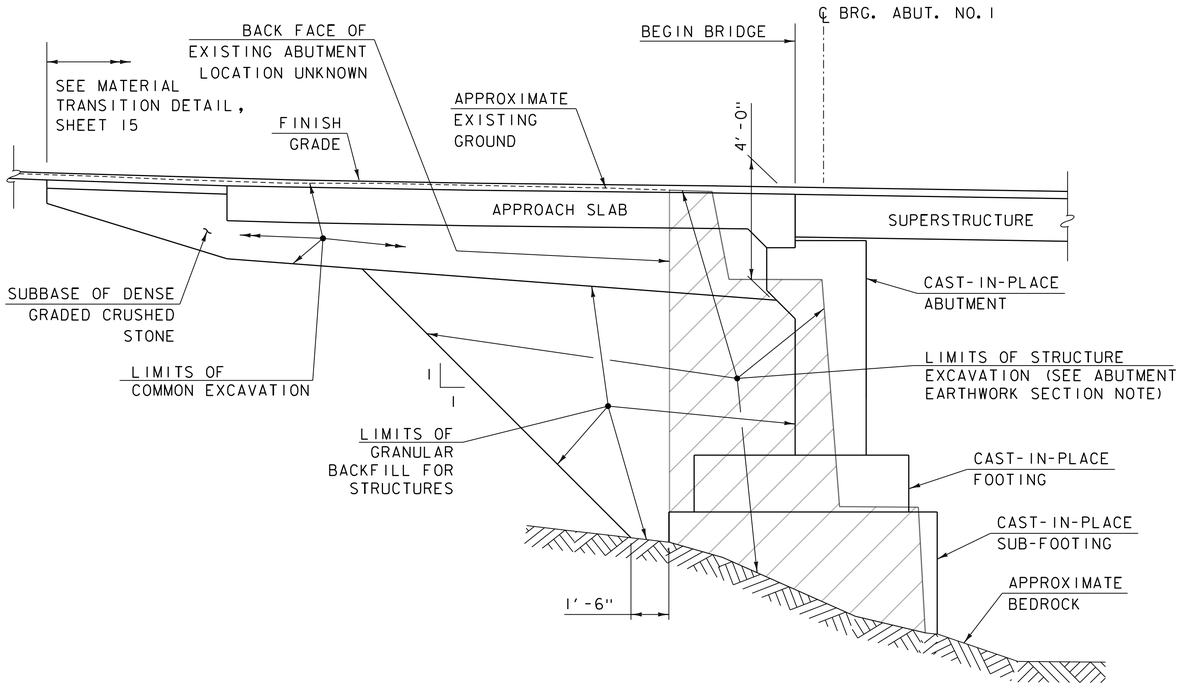

TYPICAL ABUTMENT NO 1 EARTHWORK SECTION

NOT TO SCALE

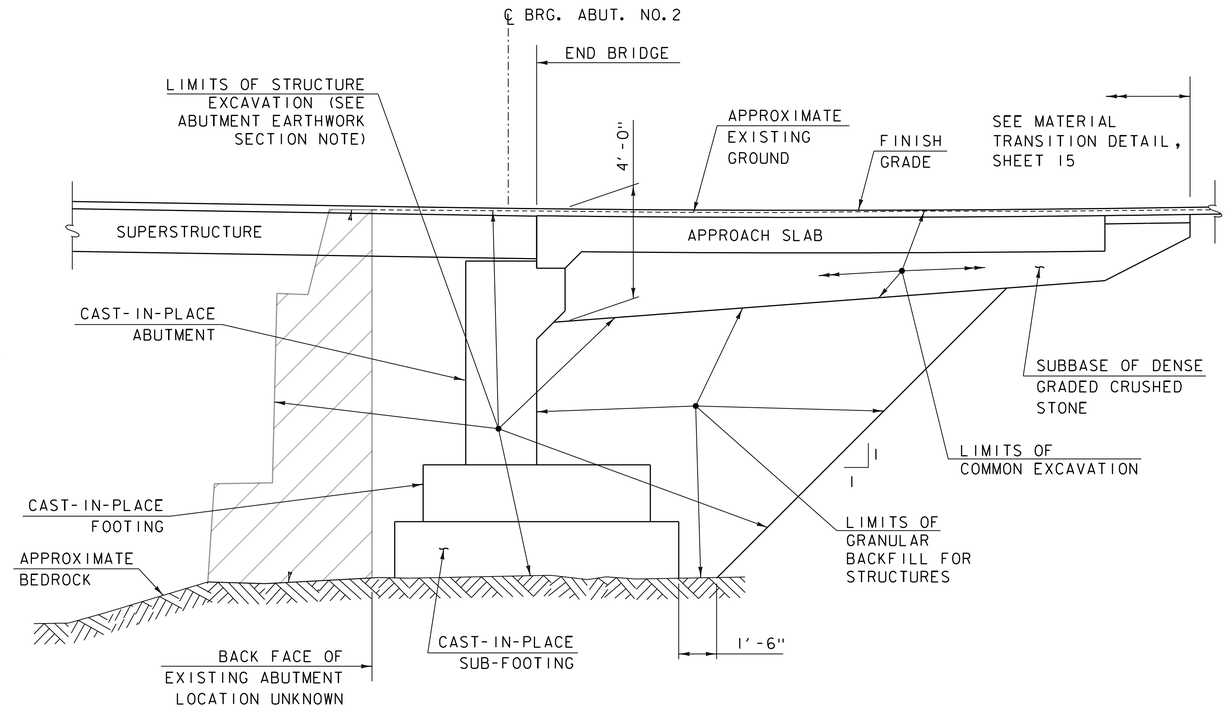

TYPICAL ABUTMENT NO 2 EARTHWORK SECTION

NOT TO SCALE

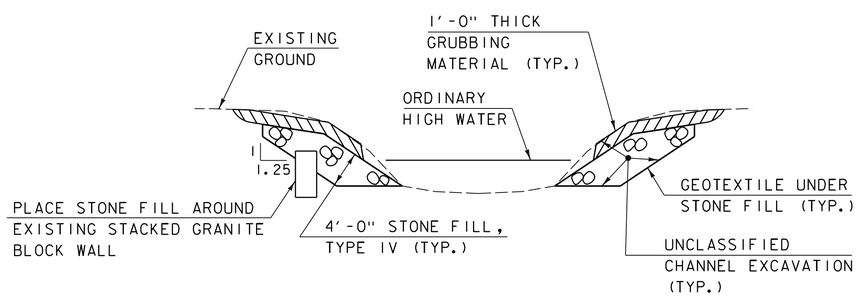

TYPICAL CHANNEL SECTION

(NOT TO SCALE)

1) GRUBBING MATERIAL SHALL BE PLACED UNDERNEATH STRUCTURES WHERE THERE IS MORE THAN 6 FEET VERTICALLY FROM ORDINARY HIGH WATER (OHW) TO THE BOTTOM OF SUPERSTRUCTURE AND MORE THAN 6 FEET HORIZONTALLY FROM OHW LINE TO FRONT FACE OF ABUTMENT. THIS MATERIAL SHALL START JUST ABOVE THE OHW ELEVATION AND TERMINATE 3 FEET HORIZONTALLY FROM THE FRONT FACE OF THE ABUTMENT. THIS MATERIAL SHALL NOT BE PLACED UNDERNEATH DOWNSPOUTS. SEE THE CHANNEL SECTIONS FOR ADDITIONAL DETAILING.

2) WHENEVER CHANNEL SLOPE INTERSECTS ROADWAY SUBBASE, GRUBBING MATERIAL SHALL BEGIN AT THE BOTTOM OF SUBBASE.

ABUTMENT EARTHWORK SECTION NOTE

ACTUAL LIMITS OF STRUCTURE EXCAVATIONS SHALL BE DETERMINED BY THE CONTRACTOR. HOWEVER, ONLY THE STRUCTURE EXCAVATION BETWEEN THE LIMITS SHOWN WILL BE PAID FOR UNDER ITEM 204.25 "STRUCTURE EXCAVATION". EXCAVATION BY THE CONTRACTOR OUTSIDE OF THESE LIMITS WILL BE AT THE EXPENSE OF THE CONTRACTOR INCLUDING ANY COSTS RELATED TO REMOVAL, HANDLING, TRANSPORATION AND STORAGE OF CONTAMINATED SOILS OUTSIDE OF THE LIMITS SHOWN.

McFarland Johnson

PROJECT NAME: BARRE TOWN	
PROJECT NUMBER: BF 0169(12)	
FILE NAME: zl2c576earth_typ.dgn	PLOT DATE: 1/14/2022
PROJECT LEADER: D. KULL	DRAWN BY: S. MERKWAN
DESIGNED BY: S. LISTER	CHECKED BY: R. JOY
CHANNEL & ABUTMENT EARTHWORK SECTIONS	SHEET 5 OF 50

PROJECT NOTES

GENERAL

1. ALL MATERIALS AND CONSTRUCTION SHALL CONFORM TO THE STATE OF VERMONT AGENCY OF TRANSPORTATION STANDARD SPECIFICATIONS FOR CONSTRUCTION, DATED 2018, AND ITS LATEST REVISIONS, AND THE AASHTO LRFD BRIDGE DESIGN SPECIFICATIONS, 8th EDITION, AND ITS LATEST REVISIONS.
2. ALL DIMENSIONS ARE HORIZONTAL OR VERTICAL, AND ARE GIVEN AT 68 DEGREES FAHRENHEIT, UNLESS NOTED OTHERWISE.
3. A BRIDGE PLAQUE FURNISHED BY THE AGENCY SHALL BE CAST INTO ABUTMENT NO 1 ON WINGWALL N0. 1. SEE S-501 FOR FURTHER DETAILS.
4. THESE PLANS WERE PREPARED BASED ON THE INFORMATION OBTAINED FROM A SURVEY COMPLETED BY VTRANS AND FROM THE RECORD PLANS OF THE EXISTING STRUCTURE. THE CONTRACTOR MAY BE REQUIRED TO MAKE CHANGES TO THE DIMENSIONS SHOWN ON THE PLANS TO FIT THE ACTUAL FIELD CONDITIONS. THE CONTRACTOR SHALL FIELD VERIFY ALL DIMENSIONS PRIOR TO FABRICATION.
5. THE TOTAL ANTICIPATED AREA OF EARTH DISTURBANCE ON THIS PROJECT IS 0.46 ACRES.

BRIDGE REMOVAL AND STRUCTURE EXCAVATION

6. REMOVAL OF THE EXISTING STRUCTURE WILL BE PAID FOR UNDER ITEM 529.15 “REMOVAL OF STRUCTURE (2185 SF-EST.)". THIS WORK SHALL INCLUDE:
   - REMOVAL OF THE ENTIRE EXISTING SUPERSTRUCTURE
7. ANY TEMPORARY MEANS OF SUPPORTING EXCAVATION NECESSARY TO MAINTAIN TRAFFIC AND PREVENT UNDERMINING OF ADJACENT WALLS AND OTHER EXISTING PIPES AND STRUCTURES, WILL BE INCLUDED IN THE APPROPRIATE EXCAVATION ITEM. CONSTRUCTION DRAWINGS SHALL BE REQUIRED AS PER SUBSECTION 105.03

EARTHWORK

8. SOILS THROUGHOUT THE SITE HAVE BEEN SAMPLED AND PRECHARACTERIZED PRIOR TO CONSTRUCTION. SOIL CONTAMINATES, AND REQUIREMENTS FOR HANDLING, TESTING, STORING TRANSPORATION AND FINAL DISPOSITION OF SOILS ARE REGULATED BY THE PROJECT SPECIFIC “SOIL AND GROUNDWATER MANAGEMENT PLAN” (SGMP).
9. THE CONTRACTOR SHALL MAKE EVERY EFFORT TO REUSE SUITABLE EXCAVATED MATERIALS ONSITE.
10. NO OFF-SITE EARTH BORROW MATERIAL IS ANTICIPATED TO BE USED FOR THIS PROJECT.
11. SOILS THAT ARE EXCAVATED, REMAIN ONSITE, AND ARE REUSED AS PART OF THE CONSTRUCTION WILL NOT BE PAID FOR SEPARATELY.
12. THE INITIAL COST OF EXCAVATION AND STOCKPILING OF CONTAMINATED SOILS AT THE DESIGNATED SITE WILL BE PAID FOR UNDER THE APPROPRIATE CONTRACT EXCAVATION ITEMS.
13. ALL COSTS FOR REMOVAL AND DISPOSAL OF CONTAMINATED SOILS FROM THE DESIGNATED STOCKPILE AREA SHALL BE INCLUDED IN THE UNIT BID PRICE FOR CONTRACT ITEMS 900.608 “SPECIAL PROVISION (EXCAVATION OF PETROLEUM CONTAMINATED SOILS, CLASS B)” AND 900.608 “SPECIAL PROVISION (EXCAVATION OF PETROLEUM CONTAMINATED SOILS, CLASS C)”.
14. ANY WASTE MATERIAL THAT WILL BE TAKEN OFF SITE SHALL BE REMOVED FROM THE REQUIRED STOCKPILES AND HAULED TO THE AS SPECIFIED FACILITY IN ACCORDANCE WITH THE SGMP AND SPECIAL PROVISION.
15. IN THE EVENT PETROLEUM CONTAMINATED SOILS (PCS), GROUNDWATER OR OTHER MATERIALS ARE ENCOUNTERED DURING EXCAVATION AND CONSTRUCTION ACTIVITES BASED ON VISUAL, OLFACTORY, OR OTHER EVIDENCE, THE CONTRACTOR SHALL STOP WORK IN THE VICINITY OF THE SUSPECT MATERIAL TO AVOID FURTHER SPREADING OF THE MATERIAL AND SHALL NOTIFY THE ENGINEER IMMEDIATELY SO THAT THE APPROPRIATE TESTING ACTION CAN BE TAKEN IN ACCORDANCE WITH THE SGMP.

TRAFFIC CONTROL

16. THE CONTRACTOR SHALL IMPLEMENT THE ROAD CLOSURE, TRAFFIC CONTROL, AND DETOUR AS SHOWN ON THE PLANS. THE CONTRACTOR SHALL BE RESPONSIBLE FOR THE DESIGN AND IMPLEMENTATION OF A SITE-SPECIFIC TRAFFIC CONTROL PLAN FOR ANY STAGES OF CONSTRUCTION NOT SHOWN IN THE PLANS. THE PLAN SHALL CLEARLY DETAIL HOW TRAFFIC WILL BE MAINTAINED. THE PLAN SHALL SPECIFY ALL CONSTRUCTION ACTIVITIES REQUIRING ALTERNATING ONE WAY TRAFFIC OR TEMPORARY TRAFFIC CONTROL MEASURES, RELATE THOSE ACTIVITIES TO THE CONSTRUCTION SCHEDULE, AND SHOW APPROPRIATE TEMPORARY TRAFFIC CONTROL. THE CONTRACTOR SHALL SUBMIT DETAILED TRAFFIC CONTROL PLANS TO THE ENGINEER FOR APPROVAL PER SUBSECTION 105.03. ALL COSTS WILL BE INCLUDED IN ITEM 641.11, “TRAFFIC CONTROL, ALL-INCLUSIVE".
17. ALL SIGNS SHALL BE IN ACCORDANCE WITH THE CURRENT EDITIONS OF THE “MANUAL ON UNIFORM TRAFFIC CONTROL DEVICES" (MUTCD) AND ITS LATEST REVISIONS AND THE “STANDARD HIGHWAY SIGNS AND MARKINGS" BOOK (SHSM) PUBLISHED BY THE FEDERAL HIGHWAY ADMINISTRATION (FHWA).
18. FULL ACCESS TO ALL DRIVES WITHIN THE PROJECT LIMITS SHALL BE MAINTAINED AT ALL TIMES. THIS WORK WILL BE CONSIDERED INCIDENTAL TO ITEM 641.11, “TRAFFIC CONTROL, ALL-INCLUSIVE”. IF THE CONTRACTOR MUST TEMPORARILY CLOSE A DRIVE, NOTIFY THE PROPERTY OWNER 24 HOURS BEFORE THE CLOSURE. WORK WITH THE PROPERTY OWNER TO ACCOMMODATE THEIR ACCESS DURING THE CLOSURE.
19. INSTALLATION OF DETOUR AND ON-SITE SIGNS SHALL NOT BLOCK ANY EXISTING TRAFFIC CONTROL SIGN ASSEMBLIES AND SHALL MODIFY OR BE PLACED ADJACENT TO EXISTING ROUTE MARKER SIGN ASSEMBLIES WHEN POSSIBLE. THE CONTRACTOR SHOULD MAINTAIN AT LEAST 200 FEET BETWEEN SIGN ASSEMBLIES WHEN POSSIBLE.
20. TEMPORARY TRAFFIC BARRIER SHALL MEET THE REQUIREMENTS OF 621.90. PAYMENT FOR FURNISHING, MAINTAINING, INSTALLATION, REMOVAL AND RESETTING WILL BE INCLUDED UNDER ITEM 641.11, “TRAFFIC CONTROL, ALL-INCLUSIVE.”

CONCRETE AND REINFORCING STEEL

21. ALL REINFORCING STEEL SHALL BE DETAILED AND FABRICATED USING PROCEDURES AND TOLERANCES IN ACCORDANCE WITH APPLICABLE PUBLICATIONS OF THE CONCRETE REINFORCING STEEL INSTITUTE.
22. TEST BARS SHALL BE PROVIDED IN ACCORDANCE WITH THE “VERMONT AGENCY OF TRANSPORTATION MATERAIL SAMPLING MANUAL” AVAILABLE ON THE AGENCY WEBSITE. ALL COSTS ASSOCIATED WITH PROVIDING BARS FOR TESTING WILL BE INCLUDED IN THE UNIT BID PRICE FOR THE APPROPRIATE ITEM.
23. ITEM 514.10, “WATER REPELLENT, SILANE", SHALL BE APPLIED TO ALL EXPOSED CONCRETE ON THE BRIDGE SUPERSTRUCTURE AND SUBSTRUCTURE, WITH THE EXCEPTION OF THE UNDERSIDE OF THE DECK BETWEEN DRIP NOTCHES. THE SUBSTRUCTURE AND SUPERSTRUCTURE SHALL RECEIVE A MINIMUM OF ONE COAT OF WATER REPELLENT, SILANE. APPLICATION OF THE SEALER SHALL BE COMPLETED WITHIN 40 DAYS OF ORIGINAL CONCRETE PLACEMENT.
24. MINIMUM CLEAR COVER FOR REINFORCING STEEL SHALL BE AS FOLLOWS:

ALONG BACK FACES OF WALLS AGAINST EARTH:	2-1/2 INCH
ALONG TOP SURFACE OF SUPERSTRUCTURE:	2 INCH
ALONG BOTTOM OF SUPERSTRUCTURE:	1-1/2 INCH
ELSEWHERE UNLESS OTHERWISE NOTED:	3 INCH

25. CONCRETE AND REINFORCING STEEL SHALL MEET THE FOLLOWING REQUIREMENTS:

CONCRETE		REINFORCING STEEL	
STRUCTURAL ELEMENT	CONTRACT ITEM	TO MEET REQUIREMENTS OF:	PAYMENT TO BE INCLUDED IN:
Solid Slab Beam (f’c=8ksi)	Item 510.25 “Prestressed Concrete Solid Slabs” as Appropriate	Level II	Item 510.25 “Prestressed Concrete Solid Slabs” as Appropriate
Superstructure Longitudinal Closure Pours (f’c=5ksi)	Item 900.608 “Special Provision (High Performance Concrete, Rapid Set)”	Level II	Item 507.12, “Reinforcing Steel Level II”
Sidewalk (f’c=4ksi)	Item 900.608 “Special Provision (High Performance Concrete, Class PCD)”	Level II	Item 507.12, “Reinforcing Steel Level II”
Bridge Railing (f’c=4ksi)	Item 900.608 “Special Provision (High Performance Concrete, Class PCD)”	Level II	Item 507.12, “Reinforcing Steel Level II”
Abutments, Wingwalls and Footings (f’c=3.5ksi)	Item 900.608 “Special Provision (High Performance Concrete, Class PCS)”	Level I (Epoxy Coated)	Item 507.11, “Reinforcing Steel Level I”
Subfooting (f’c=3ksi)	Item 541.30 “Concrete Class C”	Level I	Item 507.11, “Reinforcing Steel Level I”
Approach Slabs (f’c=4 ksi)	Item 900.608 “Special Provision (High Performance Concrete, Class PCD)”	Level II	Item 507.12, “Reinforcing Steel Level II”

26. THE MINIMUM CONCRETE STRENGTHS REQUIRED BEFORE SUBSEQUENT CONSTRUCTION ACTIVITIES SHALL BE AS NOTED BELOW:
    - SUBFOOTING: 2000 PSI BEFORE LOADING
    - ABUTMENTS: 2000 PSI BEFORE BEAM PLACEMENT
    - SOLID SLAB LONGITUDINGAL CLOSURE POURS: 4000 PSI BEFORE SIDEWALK PLACEMENT
    - SIDEWALK: 2000 PSI BEFORE POURING OF CONCRETE BRIDGE RAIL
27. HIGH PERFORMANCE CONCRETE, RAPID SET IN THE SUPERSTRUCTURE AND APPROACH SLAB CLOSURE POURS SHALL BE WET CURED UNTIL IT HAS OBTAINED A COMPRESSIVE STRENGTH OF 4000 PSI AS VERIFIED BY TESTING OF FIELD CURED CYLINDERS.
28. THE EFFECTIVE CURE TIME OF THE BRIDGE RAIL MAY BE REDUCED TO A MINIMUM OF (7) SEVEN DAYS PROVIDED THAT THE CONCRETE HAS REACHED 85% OF THE REQUIRED COMPRESSIVE STRENGTH.
29. THE LONGITUDINAL CLOSURE POUR CONCRETE SHALL OBTAIN A MINIMUM COMPRESSIVE STRENGTH OF 4000 PSI BEFORE ANY VEHICULAR LOADING.
30. ALL FORM SUPPORTS AND FORM TIES THAT ARE TO REMAIN PERMANENTLY IN THE CONCRETE ABOVE THE BRIDGE SEATS SHALL BE GALVANIZED AND CONFORM TO SECTION 726 OF THE STANDARD SPECIFICATIONS.
31. ALL EXPOSED EDGES SHALL HAVE A 1”x1” CHAMFER UNLESS OTHERWISE NOTED.
32. THE SUBFOOTING SHALL HAVE A RAKED FINISH.

SOLID SLAB BEAMS

33. DESIGN VALUES:
    a. CONCRETE COMPRESSIVE STRENGTH: f’c=8,000 PSI
    b. CONCRETE COMPRESSSIVE STRENGTH AT RELEASE: f’ci= 5,500 PSI
    c. PRESTRESSING STRANDS: 0.6 INCH DIAMETER, 270 KSI, LOW-RELAXATION 7-WIRE STRANDS
    d. JACKING FORCE PER STRAND = 44 KIPS
    e. APPARENT MODULUS OF ELASTICITY = 28,500 KSI
    f. ANTICIPATED CAMBER:

MIDSPAN CAMBER AT RELEASE	1.1 INCHES
MIDSPAN CAMBER AT ERECTION	1.9 INCHES
MIDSPAN CAMBER AT END OF CONSTRUCTION	1.3 INCHES
FINAL CAMBER	0.7 INCHES

34. THE FABRICATOR SHALL PROVIDE A CALCULATED CAMBER ESTIMATE FOR EACH OF THE PRECAST SOLID SLABS AT RELEASE, ERECTION AND FINAL CONDITIONS PRIOR TO ANY SUPERIMPOSED LOADING OF THE BEAMS. THE FABRICATOR SHALL SUBMIT THE CALCULATIONS WITH THE FABRICATION DRAWINGS AND ALL ASSOCIATED COSTS SHALL BE INCLUDED IN ITEM 510.25 PRESTRESSED CONCRETE SOLID SLABS. IT IS THE RESPONSIBILITY OF THE CONTRACTOR TO CONFRIM AT THE TIME OF FABRICATION DRAWING REVIEW THAT THE CALCULATED CAMBER ESTIMATE IS COMPATIBLE WITH THE GRADES AND ELEVATIONS OF THE STRUCTURE.
35. THE FABRICATOR MAY ALTER THE DESIGN AS DETAILED IN THE PLANS TO ACCOMMODATE THEIR SPECIFIC OPERATION. THIS ALTERATION SHALL BE DESIGNED BY A PROFESSIONAL ENGINEER LICENSED IN THE STATE OF VERMONT TO MEET SPECIFIED CRITERIA AND SHALL BE APPROVED BY THE PROJECT MANAGER.
36. ALL LIFTING POINTS IN THE SUPERSTRUCTURE SHALL BE REMOVABLE TO THE MINIMUM CLEAR COVER FOR REINFORCING STEEL SPECIFIED IN THE PLANS. THE LIFTING POINTS SHALL BE DETAILED IN THE FABRICATION DRAWINGS. PAYMENT FOR THIS WORK SHALL BE INLCUDED IN ITEM 510.25 PRESTRESSED CONCRETE SOLID SLABS.
37. ALL RECESSED LIFTING POINTS AND BLOCKOUTS SHALL BE FILLED WITH A TYPE IV MORTAR PER SUBSECTION 707.03. PAYMENT SHALL BE INCLUDED IN THE APPROPRIATE PRECAST ITEM.
38. THE METHOD OF FORMING FOR SUBSEQUENT POUR AFTER PLACING PRESTRESSED SOLID SLABS SHALL BE DETERMINED BY THE CONTRACTOR. THE CONTRACTOR IS ENCOURAGED TO WORK WITH THE FABRICATOR IF ADDITIONAL SUPPORTS ARE REQUIRED.
39. THE CONCRETE EDGES ALONG THE LONGITUDINAL CLOSURE POURS SHALL BE TREATED TO PROVIDE A ROUGHENED/EXPOSED AGGREGATE SURFACE. THE AMPLITUDE OF THE EXPOSED AGGREGATE SHALL BE A MINIMUM OF 1/8” AND BE COMPLETED PRIOR TO ERECTION OF THE BEAMS. THE FABRICATOR SHALL INDICATE THE METHOD USED TO ACHIEVE THIS PROFILE ON THE FABRICATION DRAWING AND THE METHOD USED TO PROTECT THE REINFORCING STEEL.
40. PRIOR TO CONCRETE PLACEMENT OF THE LONGITUDINAL CLOSURE POUR, THE JOINT SHALL BE SATURATED WITH WATER IN ACCORDANCE WITH SECTION 501 OF THE STANDARD SPECIFICATION.
41. NO HOLES MAY BE DRILLED IN ANY PRECAST ELEMENTS WITHOUT THE APPROVAL OF THE FABRICATOR AND THE AGENCY. IN NO CASE SHALL THE CONTRACTOR ATTACH ADDITIONAL FORM OR SCREED SUPPORTS BY DRILLING OR SIMILAR MEANS INTO ANY PRESTRESSED CONCRETE SOLID SLAB UNIT.
42. REINFORCING STEEL FROM THE SOLID SLABS INTO THE BRIDGE SIDEWALK SHALL BE CONTINUOUS AND NEITHER SPLICED NOR JOINED WITH A MECHANICAL CONNECTOR.
43. THE ELEVATIONS SHOWN ON THE PLANS ARE BASED ON THE FINAL DESIRED CONDITIONS. THE CONTRACTOR SHALL ACCOUNT FOR THE EFFECTS OF PRESTRESSED CONCRETE SOLID SLAB BEAM CAMBERS IN ALL FABRICATION DRAWINGS AND WORK EFFORTS.
44. ITEM 510.25 PRESTRESSED CONCRETE SOLID SLABS SHALL INCLUDE THE COST TO SUPPLY AND INSTALL THE COLD-POURED JOINT SEALER AROUND THE ANCHOR BOLT LOCATIONS.

SUBSTRUCTURES ON BEDROCK

50. THE ABUTMENT 1, ABUTMENT 2 AND WINGWALL FOOTINGS WILL BE FOUNDED ON BEDROCK AND SHALL BE PLACED ON CLEAN COMPETENT ROCK FREE OF LOOSE ROCK AND DEBRIS.
51. THE LOCATION OF BEDROCK SHOWN IN THE PLANS IS SUBJECT TO THE LIMITATIONS OF THE METHODS USED TO INVESTIGATE SUBSURFACE CONDITIONS. CONTRACTOR IS RESPONSIBLE FOR ESTABLISHING ACTUAL ELEVATIONS.
52. BEDROCK SHOWN ON THE PLANS IS NOT REPRESENTATIVE OF ACTUAL CONDITIONS BUT AN EXAMPLE OF HOW THE FOUNDATIONS CAN BE CONSTRUCTED ON BEDROCK. THE CONTRACTOR WILL BE RESPONSIBLIE FOR ESTABLISHING ACTUAL ELEVATIONS.
53. AFTER BEDROCK HAS BEEN EXPOSED, IF ELEVATIONS VARY FROM THE ELEVATIONS SHOWN IN THE PLANS, ADJUSTMENTS TO THE FOOTING ELEVATIONS MAY BE NECESSARY TO MINIMIZE BEDROCK REMOVAL AND/OR REDUCE SUBFOOTING CONCRETE QUANTITIES. AT THE DISCRETION OF THE ENGINEER, CONTACT THE PROJECT MANAGER IMMEDIATELY TO INQUIRE ABOUT REDESIGN OF SUBFOOTINGS. THE CONTRACTOR SHOULD EXPECT THAT A DESIGN CHANGE MAY TAKE UP TO SEVEN BUSINESS DAYS TO PROCESS AND PLAN CONSTRUCTION ACTIVITIES ACCORDINGLY.

54. UPON COMPLETION OF EXCAVATION FOR SUBSTRUCTURES FOUNDED ON BEDROCK AND PRIOR TO PLACING FORMWORK, THE ENGINEER SHALL NOTIFY THE PROJECT MANAGER AND THE VTRANS STATE GEOLOGIST. THE GEOLOGIST WILL DETERMINE IF THE BEDROCK IS COMPETENT TO OBTAIN THE REQUIRED NOMINAL BEARING RESISTANCE. THE CONTRACTOR SHALL NOTIFY THE ENGINEER 72 HOURS PRIOR TO WHEN THE ANALYSIS WILL BE NEEDED.

55. AFTER THE BEDROCK HAS BEEN EXPOSED, ADJUSTMENTS TO THE BOTTOM OF FOOTING ELEVATIONS MAY BE NECESSARY TO MINIMIZE THE BEDROCK REMOVAL AND REDUCE THE AMOUNT OF SUBFOOTING CONCRETE NEEDED. CONTACT THE PROJECT MANAGER FOR POSSIBLE REDESIGN. NO FURTHER WORK SHALL BE DONE ON THE SUBFOOTINGS UNTIL A REPLY IS RECEIVED FROM THE PROJECT MANAGER. A TURN-AROUND TIME OF UP TO THREE BUSINESS DAYS MAY BE EXPECTED.

56. ALL OVERBREAKAGE BEYOND ALLOWANCE IN 204.06(B)(1) SHALL BE REPLACED WITH "CONCRETE, CLASS C" AT THE CONTRACTORS EXPENSE..

57. ANY EXPOSED SUBFOOTING FACES EXCEEDING 5 FEET IN HEIGHT SHALL BE REINFORCED WITH #5 REINFORCING STEEL BARS SPACED AT 12 INCHES EACH WAY, AN ESTIMATED QUANTITY FOR THESE BARS HAS BEEN INCLUDED IN 507.11, “REINFORCING STEEL, LEVEL I”.

58. THE LIMITS OF SUBFOOTING FOR THE ABUTMENTS AND WINGWALLS SHALL BE 1’-0” OUTISDE THE LIMITS OF THE FOOTING, OR AS DIRECTED BY THE RESIDENT ENGINEER, AND BE A MINIMUM OF 2’-0” THICK.

59. EXPOSED BEDROCK THAT IS SLOPED GREATER THAN 4H:1V IN ANY DIRECTION SHALL HAVE DOWELS GROUTED A MINIMUM OF 2 FEET INTO BEDROCK AND 2 FEET INTO CONCRETE. A NOMINAL QUANTITY HAS BEEN INCLUDED IN THE QUANTITY SHEET. DOWELS SHALL BE PLACED IN A 2’ X 2’ GRID IN ALL AREAS WHERE THE SLOPE EXCEEDS 4H:1V.

60. ALL COSTS WITH PREVENTING ROCK FROM ENTERING JAIL BRANCH SHALL BE INCLUDED IN ITEM 203.27, UNCLASSIFIED CHANNEL EXCAVATION.

STATE OF VERMONT
AGENCY OF TRANSPORTATION

QUANTITY SHEET 1

SUMMARY OF ESTIMATED QUANTITIES					TOTALS		DESCRIPTIONS			
1011 - ROADWAY	1051 - EROSION CONTROL	1211 - BRIDGE NO. 1	1999 - FULL C.E. ITEMS		GRAND TOTAL	FINAL	UNIT	ITEMS	ITEM NUMBER	ROUND
1					1		LS	CLEARING AND GRUBBING, INCLUDING INDIVIDUAL TREES AND STUMPS	201.10	
380					380		CY	COMMON EXCAVATION	203.15	
50					50		CY	GRANULAR BORROW	203.32	
2					2		CY	TRENCH EXCAVATION OF EARTH	204.20	
1					1		CY	TRENCH EXCAVATION OF EARTH, EXPLORATORY (N.A.B.I.)	204.22	
		1115			1115		CY	STRUCTURE EXCAVATION	204.25	
		525			525		CY	GRANULAR BACKFILL FOR STRUCTURES	204.30	
160					160		SY	COARSE-MILLING, BITUMINOUS PAVEMENT	210.10	
260					260		CY	SUBBASE OF DENSE GRADED CRUSHED STONE	301.35	
4					4		CWT	EMULSIFIED ASPHALT	404.65	
85					85		SY	HAND-PLACED BITUMINOUS CONCRETE MATERIAL, DRIVES	406.38	
		1			1		LS	STRUCTURAL STEEL (GALVANIZED)	506.75	
		25340			25340		LB	REINFORCING STEEL, LEVEL I	507.11	
		15640			15640		LB	REINFORCING STEEL, LEVEL II	507.12	
		400			400		LF	DRILLING AND GROUTING DOWELS	507.16	
		144			144		LF	PRESTRESSED CONCRETE SOLID SLABS (18"X36")	510.25	
		384			384		LF	PRESTRESSED CONCRETE SOLID SLABS (18"X48")	510.25	
		23			23		GAL	WATER REPELLENT, SILANE	514.10	
		33			33		LF	BRIDGE EXPANSION JOINT, ASPHALTIC PLUG	516.10	
		200			200		SY	MEMBRANE WATERPROOFING, SPRAY APPLIED	519.10	
		112			112		LF	JOINT SEALER, HOT POURED	524.11	
		75			75		LF	BRIDGE RAILING, GALVANIZED STEEL TUBING/CONCRETE COMBINATION	525.45	
		1			1		EACH	PARTIAL REMOVAL OF STRUCTURE (2185 SF)	529.20	
		44			44		EACH	BEARING DEVICE ASSEMBLY, PLAIN ELASTOMERIC PAD	531.16	
11		215			226		CY	CONCRETE, CLASS C	541.30	
48					48		LF	18" CPEP(SL)	601.2615	
		20			20		CY	REBUILT STONE MASONRY	602.35	
2					2		EACH	PRECAST REINFORCED CONCRETE CATCH BASIN WITH CAST IRON GRATE	604.20	
1					1		EACH	CHANGING ELEVATION OF DROP INLETS, CATCH BASINS, OR MANHOLES	604.40	
40					40		HR	POWER GRADER RENTAL	608.15	
		93			93		CY	STONE FILL, TYPE IV	613.13	
120					120		LF	VERTICAL GRANITE CURB	616.21	
87					87		SY	PORTLAND CEMENT CONCRETE SIDEWALK, 5 INCH	618.10	
16					16		SF	DETECTABLE WARNING SURFACE	618.30	
75					75		LF	STEEL BEAM GUARDRAIL, GALVANIZED	621.20	
3					3		EACH	ANCHOR FOR STEEL BEAM RAIL	621.60	
94					94		LF	REMOVAL AND DISPOSAL OF GUARDRAIL	621.80	
170					170		LF	TEMPORARY TRAFFIC BARRIER	621.90	
200					200		HR	UNIFORMED TRAFFIC OFFICERS	630.10	
400					400		HR	FLAGGERS	630.15	

DETAILED SUMMARY OF QUANTITIES

QUANTITIES	UNIT	ITEMS

McFarland Johnson

PROJECT NAME: BARRE TOWN
PROJECT NUMBER: BF 0169(12)

FILE NAME: zl2c576form.dgn
PROJECT LEADER: D. KULL
DESIGNED BY: S. LISTER
QUANTITY SHEET NO. 1

PLOT DATE: 1/14/2022
DRAWN BY: S. MERKWAN
CHECKED BY: D. KULL
SHEET 8 OF 50

STATE OF VERMONT
AGENCY OF TRANSPORTATION

QUANTITY SHEET 2

SUMMARY OF ESTIMATED QUANTITIES					TOTALS		DESCRIPTIONS			
1011 - ROADWAY	1051 - EROSION CONTROL	1211 - BRIDGE NO. 1	1999 - FULL C.E. ITEMS		GRAND TOTAL	FINAL	UNIT	ITEMS	ITEM NUMBER	ROUND
			1		1		LS	FIELD OFFICE, ENGINEERS	631.10	
			1		1		LS	TESTING EQUIPMENT, CONCRETE	631.16	
			1		1		LS	TESTING EQUIPMENT, BITUMINOUS	631.17	
1					1		LS	TESTING EQUIPMENT, GROUT	631.19	
			3000		3000		DL	FIELD OFFICE COMMUNICATIONS (N.A.B.I.)	631.26	
5					5		EACH	CPM SCHEDULE	633.10	
1					1		LS	MOBILIZATION/DEMOBILIZATION	635.11	
1					1		LS	TRAFFIC CONTROL, ALL-INCLUSIVE	641.11	
4					4		EACH	PORTABLE CHANGEABLE MESSAGE SIGN	641.15	
280					280		LF	DURABLE 4 INCH WHITE LINE, POLYUREA	646.404	
330					330		LF	DURABLE 4 INCH YELLOW LINE, POLYUREA	646.414	
11					11		LF	DURABLE 24 INCH STOP BAR, POLYUREA	646.484	
40					40		LF	DURABLE CROSSWALK MARKING, POLYUREA	646.504	
70					70		SY	GEOTEXTILE UNDER STONE FILL	649.31	
30					30		SY	GEOTEXTILE FOR FILTER CURTAIN	649.61	
	5				5		LB	SEED	651.15	
	22				22		LB	FERTILIZER	651.18	
	0.1				0.1		TON	AGRICULTURAL LIMESTONE	651.20	
	22				22		CY	TOPSOIL	651.35	
		74			74		SY	GRUBBING MATERIAL	651.40	
	1				1		LS	EPSC PLAN	653.01	
	180				180		HR	MONITORING EPSC PLAN	653.02	
	1				1		LU	MAINTENANCE OF EPSC PLAN (N.A.B.I.)	653.03	
	1				1		TON	HAY MULCH	653.10	
	200				200		SY	ROLLED EROSION CONTROL PRODUCT, TYPE I	653.20	
	30				30		CY	STABILIZED CONSTRUCTION ENTRANCE	653.35	
	4				4		EACH	INLET PROTECTION DEVICE, TYPE II	653.41	
	360				360		LF	SILT FENCE, TYPE I	653.475	
	110				110		LF	BARRIER FENCE	653.50	
	360				360		LF	PROJECT DEMARCATION FENCE	653.55	
	360				360		LF	EROSION LOG	653.60	
75					75		LF	SQUARE TUBE SIGN POST AND ANCHOR	675.341	
13					13		EACH	RESETTING SIGNS	675.60	
20					20		LF	WIRED CONDUIT (4")(PVC)(SCH. 80)	678.23	
1					1		EACH	PULL BOX, STANDARD	678.25	
1					1		EACH	REMOVE STREET LIGHT ASSEMBLY	679.24	
1					1		EACH	STREET LIGHT ASSEMBLY	679.46	
1					1		LU	PRICE ADJUSTMENT, FUEL (N.A.B.I.)	690.50	
		20			20		CY	SPECIAL PROVISION (HIGH PERFORMANCE CONCRETE, RAPID SET)	900.608	
		88			88		CY	SPECIAL PROVISION (CONCRETE, HIGH PERFORMANCE CLASS PCD)	900.608	

DETAILED SUMMARY OF QUANTITIES		
QUANTITIES	UNIT	ITEMS

McFarland Johnson

PROJECT NAME: BARRE TOWN
PROJECT NUMBER: BF 0169(12)

FILE NAME: zl2c576form.dgn
PROJECT LEADER: D. KULL
DESIGNED BY: S. LISTER
QUANTITY SHEET NO. 2

PLOT DATE: 1/14/2022
DRAWN BY: S. MERKWAN
CHECKED BY: D. KULL
SHEET 9 OF 50

STATE OF VERMONT
AGENCY OF TRANSPORTATION

QUANTITY SHEET 3

| SUMMARY OF ESTIMATED QUANTITIES | | |

STATE OF VERMONT
AGENCY OF TRANSPORTATION

BRIDGE QUANTITY SHEET 1

SUMMARY OF BRIDGE QUANTITIES					TOTALS	DESCRIPTIONS			DETAILED SUMMARY OF QUANTITIES		
APPROACH SLAB 1	ABUTMENT 1	SUPER-STRUCTURE	ABUTMENT 2	APPROACH SLAB 2	BRIDGE TOTAL	UNIT	ITEMS	ITEM NUMBER	QUANTITIES	UNIT	ITEMS
	260		855		1115	CY	STRUCTURE EXCAVATION	204.25			
	200		325		525	CY	GRANULAR BACKFILL FOR STRUCTURES	204.30			
		1			1	LS	STRUCTURAL STEEL (GALVANIZED)	506.75			
	12962		12378		25340	LB	REINFORCING STEEL, LEVEL I	507.11			
5368		5726		4546	15640	LB	REINFORCING STEEL, LEVEL II	507.12			
	200		200		400	LF	DRILLING AND GROUTING DOWELS	507.16			
		144			144	LF	PRESTRESSED CONCRETE SOLID SLABS (18"X36")	510.25			
		384			384	LF	PRESTRESSED CONCRETE SOLID SLABS (18"X48")	510.25			
		23			23	GAL	WATER REPELLENT, SILANE	514.10			
33					33	LF	BRIDGE EXPANSION JOINT, ASPHALTIC PLUG	516.10			
		200			200	SY	MEMBRANE WATERPROOFING, SPRAY APPLIED	519.10			
	31		33	48	112	LF	JOINT SEALER, HOT POURED	524.11			
		75			75	LF	BRIDGE RAILING, GALVANIZED STEEL TUBING/CONCRETE COMBINATION	525.45			
		1			1	EACH	PARTIAL REMOVAL OF STRUCTURE (2185 SF)	529.20			
	22		22		44	EACH	BEARING DEVICE ASSEMBLY, PLAIN ELASTOMERIC PAD	531.16			
	105		110		215	CY	CONCRETE, CLASS C	541.30			
			20		20	20	REBUILT STONE MASONRY	602.35			
	50		43		93	CY	STONE FILL, TYPE IV	613.13			
	40		34		74	SY	GRUBBING MATERIAL (12")	651.40			
		20			20	CY	SPECIAL PROVISION (HIGH PERFORMANCE CONCRETE, RAPID SET)	900.608			
	31	32	25		88	CY	SPECIAL PROVISION (CONCRETE, HIGH PERFORMANCE CLASS PCD)	900.608			
	90		90		180	CY	SPECIAL PROVISION (CONCRETE, HIGH PERFORMANCE CLASS PCS)	900.608			
	15		15		30	CY	SPECIAL PROVISION (EXCAVATION OF PETROLEUM CONTAMINATED SOILS, CLASS B)	900.608			
	125		100		225	CY	SPECIAL PROVISION (EXCAVATION OF PETROLEUM CONTAMINATED SOILS, CLASS C)	900.608			
			1		1	LS	SPECIAL PROVISION (CONSTRUCTION VIBRATION AND CRACK MONITORING)	900.645			
			1		1	DL	SPECIAL PROVISION (INCENTIVE/DISINCENTIVE)(N.A.B.I.)	900.650			
		34			34	TON	SPECIAL PROVISION (BITUMINOUS CONCRETE PAVEMENT, SMALL QUANTITY)	900.680			

McFarland Johnson

PROJECT NAME: BARRE TOWN
PROJECT NUMBER: BF 0169(12)

FILE NAME: zl2c576form.dgn
PROJECT LEADER: D. KULL
DESIGNED BY: S. LISTER
BRIDGE QUANTITY SHEET

PLOT DATE: 1/14/2022
DRAWN BY: S. MERKWAN
CHECKED BY: D. KULL
SHEET 11 OF 50

GENERAL INFORMATION

SYMBOLOGY LEGEND NOTE

THE SYMBOLOGY ON THIS SHEET IS INTENDED TO COVER STANDARD CONVENTIONAL SYMBOLOGY. THE SYMBOLOGY IS USED FOR EXISTING & PROPOSED FEATURES WITH HEAVIER LINEWEIGHT, IN COMBINATION WITH PROJECT ANNOTATION, AS NOTED ON PROJECT PLAN SHEETS. THIS LEGEND SHEET COVERS THE BASICS. SYMBOLOGY ON PLANS MAY VARY, PLAN ANNOTATIONS AND NOTES SHOULD BE USED TO CLARIFY AS NEEDED.

R.O.W. ABBREVIATIONS (CODES) & SYMBOLS

POINT	CODE	DESCRIPTION
	BF	BARRIER FENCE
	CH	CHANNEL EASEMENT
	CONST	CONSTRUCTION EASEMENT
	CUL	CULVERT EASEMENT
	D&C	DISCONNECT & CONNECT
	DIT	DITCH EASEMENT
	DR	DRAINAGE EASEMENT
	DRIVE	DRIVEWAY EASEMENT
	EC	EROSION CONTROL
	HWY	HIGHWAY EASEMENT
	I&M	INSTALL & MAINTAIN EASEMENT
	LAND	LANDSCAPE EASEMENT
	PDF	PROJECT DEMARCATION FENCE
	R&RES	REMOVE & RESET
	R&REP	REMOVE & REPLACE
	R.T.& I.	RIGHT, TITLE, AND INTEREST
	SR	SLOPE RIGHT
	UE	UTILITY EASEMENT
	(P)	PERMANENT EASEMENT
	(T)	TEMPORARY EASEMENT
■	BNDNS	BOUND SET
⊡	BNDNS	BOUND TO BE SET
◎	IPNF	IRON PIN FOUND
●	IPNS	IRON PIN TO BE SET
⊠	CALC	EXISTING ROW POINT
○	PROW	PROPOSED ROW POINT
[LENGTH]		LENGTH CARRIED ON NEXT SHEET

COMMON TOPOGRAPHIC POINT SYMBOLS

POINT	CODE	DESCRIPTION
	APL	BOUND APPARENT LOCATION
	BM	BENCHMARK
	BND	BOUND
	CB	CATCH BASIN
	COMB	COMBINATION POLE
	DITHR	DROP INLET THROATED DNC
	EL	ELECTRIC POWER POLE
	FPOLE	FLAGPOLE
	GASFIL	GAS FILLER
	GP	GUIDE POST
	GSO	GAS SHUT OFF
	GUY	GUY POLE
	GUYW	GUY WIRE
	GV	GATE VALVE
	H	TREE HARDWOOD
	HCTRL	CONTROL HORIZONTAL
	HVCTRL	CONTROL HORIZ. & VERTICAL
	HYD	HYDRANT
	IP	IRON PIN
	IPIPE	IRON PIPE
	LI	LIGHT - STREET OR YARD
	MB	MAILBOX
	MH	MANHOLE (MH)
	MM	MILE MARKER
	PM	PARKING METER
	PMK	PROJECT MARKER
	POST	POST STONE/WOOD
	RRSIG	RAILROAD SIGNAL
	RRSL	RAILROAD SWITCH LEVER
	S	TREE SOFTWOOD
	SAT	SATELLITE DISH
	SHRUB	SHRUB
	SIGN	SIGN
	STUMP	STUMP
	TEL	TELEPHONE POLE
	TIE	TIE
	TSIGN	SIGN W/DOUBLE POST
	VCTRL	CONTROL VERTICAL
	WELL	WELL
	WSO	WATER SHUT OFF

THESE ARE COMMON VAOT SURVEY POINT SYMBOLS FOR EXISTING FEATURES, ALSO USED FOR PROPOSED FEATURES WITH HEAVIER LINEWEIGHT, IN COMBINATION WITH PROPOSED ANNOTATION.

PROPOSED GEOMETRY CODES

CODE	DESCRIPTION
PC	POINT OF CURVATURE
PI	POINT OF INTERSECTION
CC	CENTER OF CURVE
PT	POINT OF TANGENCY
PCC	POINT OF COMPOUND CURVE
PRC	POINT OF REVERSE CURVE
POB	POINT OF BEGINNING
POE	POINT OF ENDING
STA	STATION PREFIX
AH	AHEAD STATION SUFFIX
BK	BACK STATION SUFFIX
D	CURVE DEGREE OF (100FT)
R	CURVE RADIUS OF
T	CURVE TANGENT LENGTH
L	CURVE LENGTH OF
E	CURVE EXTERNAL DISTANCE
CB	CHORD BEARING

UTILITY SYMBOLOGY

UNDERGROUND UTILITIES

UGU	UTILITY (GENERIC-UNKNOWN)
UT	TELEPHONE
UE	ELECTRIC
UC	CABLE (TV)
UEC	ELECTRIC+CABLE
UET	ELECTRIC+TELEPHONE
UCT	CABLE+TELEPHONE
UECT	ELECTRIC+CABLE+TELEPHONE
G	GAS LINE
W	WATER LINE
S	SANITARY SEWER (SEPTIC)

ABOVE GROUND UTILITIES (AERIAL)

AGU	UTILITY (GENERIC-UNKNOWN)
T	TELEPHONE
E	ELECTRIC
C	CABLE (TV)
EC	ELECTRIC+CABLE
ET	ELECTRIC+TELEPHONE
AER E&T	ELECTRIC+TELEPHONE
CT	CABLE+TELEPHONE
ECT	ELECTRIC+CABLE+TELEPHONE
	UTILITY POLE GUY WIRE

PROJECT CONSTRUCTION SYMBOLOGY

PROJECT DESIGN & LAYOUT SYMBOLOGY

CZ	CLEAR ZONE
	PLAN LAYOUT MATCHLINE

PROJECT CONSTRUCTION FEATURES

	TOP OF CUT SLOPE
	TOE OF FILL SLOPE
	STONE FILL
	BOTTOM OF DITCH ℄
	CULVERT PROPOSED
	STRUCTURE SUBSURFACE
PDF	PROJECT DEMARCATION FENCE
BF	BARRIER FENCE
	TREE PROTECTION ZONE (TPZ)
	STRIPING LINE REMOVAL
	SHEET PILES

CONVENTIONAL BOUNDARY SYMBOLOGY

BOUNDARY LINES

TOWN LINE	TOWN BOUNDARY LINE
COUNTY LINE	COUNTY BOUNDARY LINE
STATE LINE	STATE BOUNDARY LINE
	PROPOSED STATE R.O.W. (LIMITED ACCESS)
	PROPOSED STATE R.O.W.
	STATE ROW (LIMITED ACCESS)
	STATE ROW
	TOWN ROW
	PERMANENT EASEMENT LINE (P)
	TEMPORARY EASEMENT LINE (T)
	SURVEY LINE
P/L	PROPERTY LINE (P/L)
SR	SLOPE RIGHTS
6f	6F PROPERTY BOUNDARY
4f	4F PROPERTY BOUNDARY
HAZ	HAZARDOUS WASTE

EPSC LAYOUT PLAN SYMBOLOGY

EPSC MEASURES

	FILTER CURTAIN
	SILT FENCE
	SILT FENCE WOVEN WIRE
	CHECK DAM
	DISTURBED AREAS REQUIRING RE-VEGETATION
	EROSION MATTING

SEE EPSC DETAIL SHEETS FOR ADDITIONAL SYMBOLOGY

ENVIRONMENTAL RESOURCES

	WETLAND BOUNDARY
	RIPARIAN BUFFER ZONE
	WETLAND BUFFER ZONE
	SOIL TYPE BOUNDARY
T&E	THREATENED & ENDANGERED SPECIES
HAZ	HAZARDOUS WASTE AREA
AG	AGRICULTURAL LAND
HABITAT	FISH & WILDLIFE HABITAT
FLOOD PLAIN	FLOOD PLAIN
OHW	ORDINARY HIGH WATER (OHW)
	STORM WATER
	USDA FOREST SERVICE LANDS
	WILDLIFE HABITAT SUIT/CONN

ARCHEOLOGICAL & HISTORIC

ARCH	ARCHEOLOGICAL BOUNDARY
HISTORIC DIST	HISTORIC DISTRICT BOUNDARY
HISTORIC	HISTORIC AREA
H	HISTORIC STRUCTURE

CONVENTIONAL TOPOGRAPHIC SYMBOLOGY

EXISTING FEATURES

	ROAD EDGE PAVEMENT
	ROAD EDGE GRAVEL
	DRIVEWAY EDGE
	DITCH
	FOUNDATION
	FENCE (EXISTING)
	FENCE WOOD POST
	FENCE STEEL POST
	GARDEN
	ROAD GUARDRAIL
	RAILROAD TRACKS
	CULVERT (EXISTING)
	STONE WALL
	WALL
	WOOD LINE
	BRUSH LINE
	HEDGE
	BODY OF WATER EDGE
	LEDGE EXPOSED

McFarland Johnson

PROJECT NAME: BARRE TOWN
PROJECT NUMBER: BF 0169(12)

FILE NAME: z12c576leg.dgn
PROJECT LEADER: D. KULL
DESIGNED BY: S. LISTER
CONVENTIONAL SYMBOLOGY LEGEND

PLOT DATE: 1/14/2022
DRAWN BY: M. LOVETT
CHECKED BY: S. IRELAND
SHEET 12 OF 50

PRIMARY CONTROL

HVCTRL #1

STANDARD DISC STAMPED

EAST BARRE DAM AZ MK

N = 602716.48
E = 1654602.64

TO REACH FROM THE INTERSECTION OF U.S.ROUTE 302 AND VT ROUTE 110 IN EAST BARRE GO SOUTHWEST ALONG ROUTE 110 FOR 0.6 MI TO THE INTERSECTION OF A FIELD DRIVE RIGHT, ABOUT OPPOSITE THE EAST BARRE DAM ON THE LEFT. TURN RIGHT AND GO SOUTWEST ALONG THE FIELD DRIVE AND THROUGH AN OPEN FIELD FOR ABOUT 295 FT TO THE SITE OF THE MARK IN THE FIELD. THE MARK IS SET IN THE TOP OF A 2 FT X 1.5 FT TRIANGULAR SHAPED ROCK OUTCROP WHICH PROJECTS ABOUT 2 IN ABOVE THE GROUND SURFACE. IT IS 294 FT SOUTHWEST OF AND ABOUT 1.5 FT HIGHER THAN THE CENTERLINE OF ROUTE 110, 264.5 FT WEST BY SOUTHWEST OF POLE #22/167, 362.5 FT SOUTH SOUTHWEST OF POLE #21/166, 334.5 FT SOUTH BY SOUTHWEST OF THE CENTER OF THE WEST (INLET) END OF A 24 IN DIAMETER METAL CULVERT WITH CONCRETE HEADWALL, 3.5 FT SOUTH BY SOUTHEAST OF A 4 IN DIAMETER CEDAR SIGN POST, AND 2.6 FT SOUTH SOUTHEAST OF A FIBERGLASS WITNESS POST.

HVCTRL #2

STANDARD DISC STAMPED

EAST BARRE DAM

N = 604224.91
E = 1655483.71
ELEV: = 1190.60

TO REACH FROM THE INTERSECTION OF U.S.ROUTE 302 AND VT ROUTE 110 IN EAST BARRE GO SOUTHEAST ALONG U.S.ROUTE 302 FOR 0.4 MI (0.6 KM) TO THE INTERSECTION OF A GRAVEL DRIVE RIGHT LEADING TO A PARKING AREA FOR THE EAST BARRE DAM. TURN RIGHT AND GO WEST UP THE GRAVEL DRIVE FOR ABOUT 70 M (229.7 FT) TO THE PARKING AREA. PARK VEHICLE AND WALK NORTH FOR ABOUT 12 M (39.4 FT) TO THE SITE OF THE MARK AT THE TOP OF A BANK. THE MARK IS SET 4 CM BELOW GROUND SURFACE IN THE TOP OF A 30 CM DIAMETER CONCRETE MONUMENT POURED 1.4 M (4.6 FT) DEEP. IT IS 21.3 M (69.9 FT) SOUTHWEST OF AND ABOUT 4 M (13.1 FT) HIGHER THAN THE CENTERLINE OF U.S.ROUTE 302, 11.6 M (38.1 FT) NORTH NORTHEAST OF THE STEEL BEAM GUARD RAIL WHICH SURROUNDS THE PARKING AREA, 16.8 M (55.1 FT) NORTH NORTHWEST OF THE NORTH CORNER OF A STONE MONUMENT WITH A BRASS SIGN, 24.0 M (78.7 FT) NORTHWEST OF THE NORTHWEST POST OF A WOOD SIGN (EAST BARRE DAM, MODIFIED IN 1960), AND 2.2 M (7.2 FT) SOUTHWEST OF A FIBERGLASS WITNESS POST AT THE TOP OF THE BANK.

* DESCRIPTION PROVIDED BY VERMONT AGENCY OF TRANSPORTATION GEODETIC SURVEY UNIT

SECONDARY CONTROL

HVCTRL #6 DESTROYED

NORTH = 605122.6810
EAST = 1653616.7590
ELEV. = 1104.9740

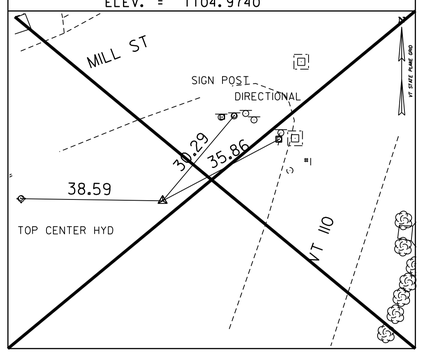

HVCTRL #10

NORTH = 606385.0000
EAST = 1653275.0800
ELEV. = 1035.0600

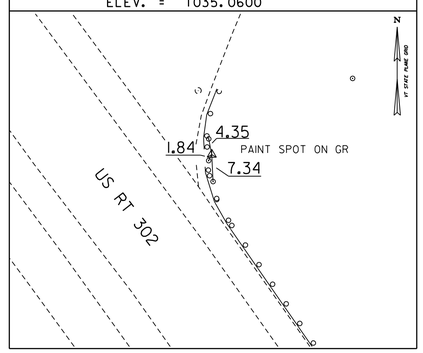

HVCTRL #11

NORTH = 606773.21
EAST = 1652904.33
ELEV. = 1010.30

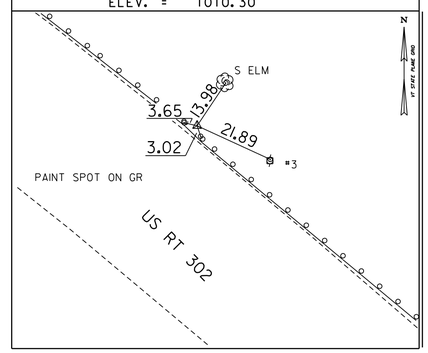

HVCTRL #20 DESTROYED

NORTH = 605355.21
EAST = 1653956.20
ELEV. = 1090.94

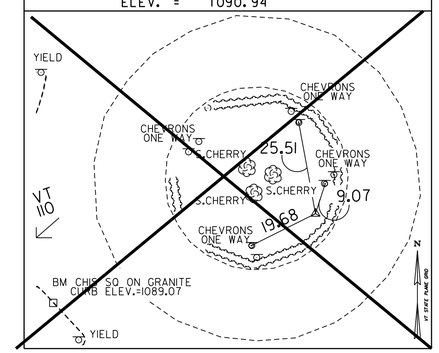

HVCTRL #21

NORTH = 605090.9910
EAST = 1653561.1418
ELEV. = 1113.5621

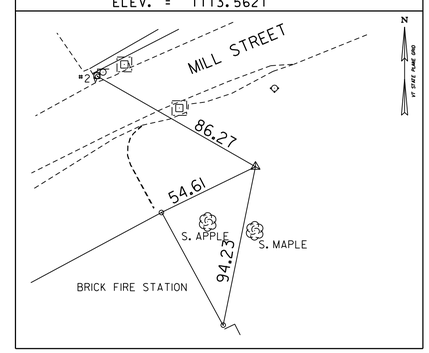

* MAIN TRAVERSE COMPLETED: MARCH 21, 2005 BY R.GILMAN, P.WINTERS, & D.BREER SECOND TRAVERSE COMPLETED SEPTEMBER 28,2019 BY R.GILMAN

SECONDARY CONTROL

HVCTRL #30

NORTH = 605362.4413
EAST = 1653953.6279
ELEV. = 1090.7810

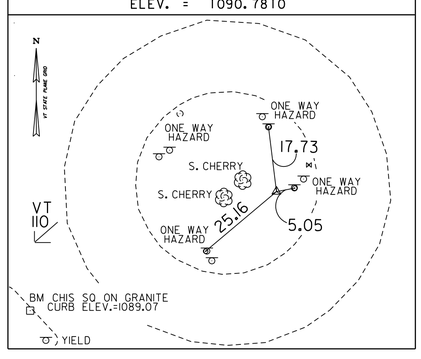

HVCTRL #31

NORTH = 605214.9893
EAST = 1653667.9704
ELEV. = 1091.9107

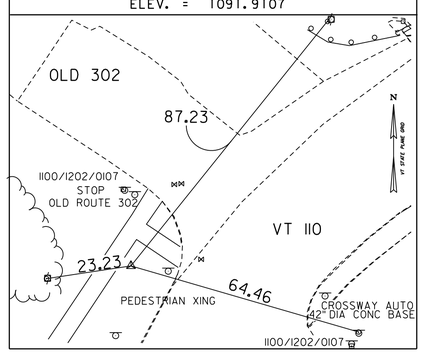

NORTH =
EAST =

NORTH =
EAST =

NORTH =
EAST =

DATUM	
VERTICAL	NAVD 88
HORIZONTAL	NAD 83 (96)
ADJUSTMENT	Compass

PROJECT NAME: BARRE TOWN
PROJECT NUMBER: BF 0169(12)

FILE NAME: x12c576sv
PROJECT LEADER: N.WARK
DESIGNED BY: VTRANS/MJ
TIE SHEET

PLOT DATE: 1/14/2022
DRAWN BY: H.MCGOWAN
CHECKED BY: L.MCCORMACK
SHEET 13 OF 50

REMOVAL AND DISPOSAL OF GUARDRAIL

STA 56+70.8 - STA 56+89.2 LT
STA 57+34.5 - STA 57+73.5 LT
STA 57+37.4 - STA 57+57.1 RT

STEEL BEAM GUARDRAIL, GALVANIZED

STA 56+43.0 - STA 56+73.4 LT
STA 57+58.4 - STA 57+86.0 LT

GUARDRAIL APPROACH SECTION, MGS TO CONCRETE END SECTON, TL-3

STA 56+73.4 - STA 56+91.5 LT
STA 57+40.3 - STA 57+56.0 RT
STA 57+40.3 - STA 57+58.4 LT

ANCHOR FOR STEEL BEAM RAIL

STA 56+43 LT
STA 57+56 RT
STA 57+86 LT

STEEL BEAM GUARDRAIL, GALVANIZED 25 FT RADIUS

STA 57+13.1 - STA 57+78.3 RT

PROPOSED DRAINAGE

(1) STA STA 57+51.0 RT TO 57+51.0 LT
NEW 18" X 31' CPEP
NEW 4' DIA. PRCCB
W/ CI GRATE TYPE D AT 57+51.0 LT

(2) STA STA 57+68.9 RT TO 57+51.0 RT
NEW 18" X 16' CPEP
NEW 4' DIA. PRCCB
W CI GRATE TYPE D AT 57+51.0 RT

REMOVE EXISTING CATCH BASIN

[3] STA 57+44.8 RT

[4] STA 57+48.9 LT

VERTICAL GRANITE CURB

STA 56+38.8 - STA 56+94.0 LT
STA 57+42.0 - STA 57+85.0 LT
STA 56+87.7 - STA 56+94.0 RT
STA 57+42.0 - STA 57+57.4 RT

PORTLAND CEMENT CONCRETE SIDEWALK 5-INCH

STA 56+38.8 - STA 56+94.0 LT
STA 57+42.0 - STA 57+89.8 LT
STA 56+87.7 - STA 56+94.0 RT
STA 57+42.0 - STA 57+57.4 RT

DETECTABLE WARNING SURFACE (DWS)

STA 56+38.8 LT
STA 57+89.5 RT

STONE FILL, TYPE IV

STA 56+79.5 - STA 57+00.2 LT
STA 57+29.5 - STA 57+51.6 RT

GEOTEXTILE UNDER STONE FILL

STA 56+79.5 - STA 57+00.2 LT
STA 57+29.5 - STA 57+51.6 RT

CONSTRUCT DRIVES

STA 56+50 RT
STA 57+65 RT

STREET LIGHT ASSEMBLY

STA 57+85.5 LT

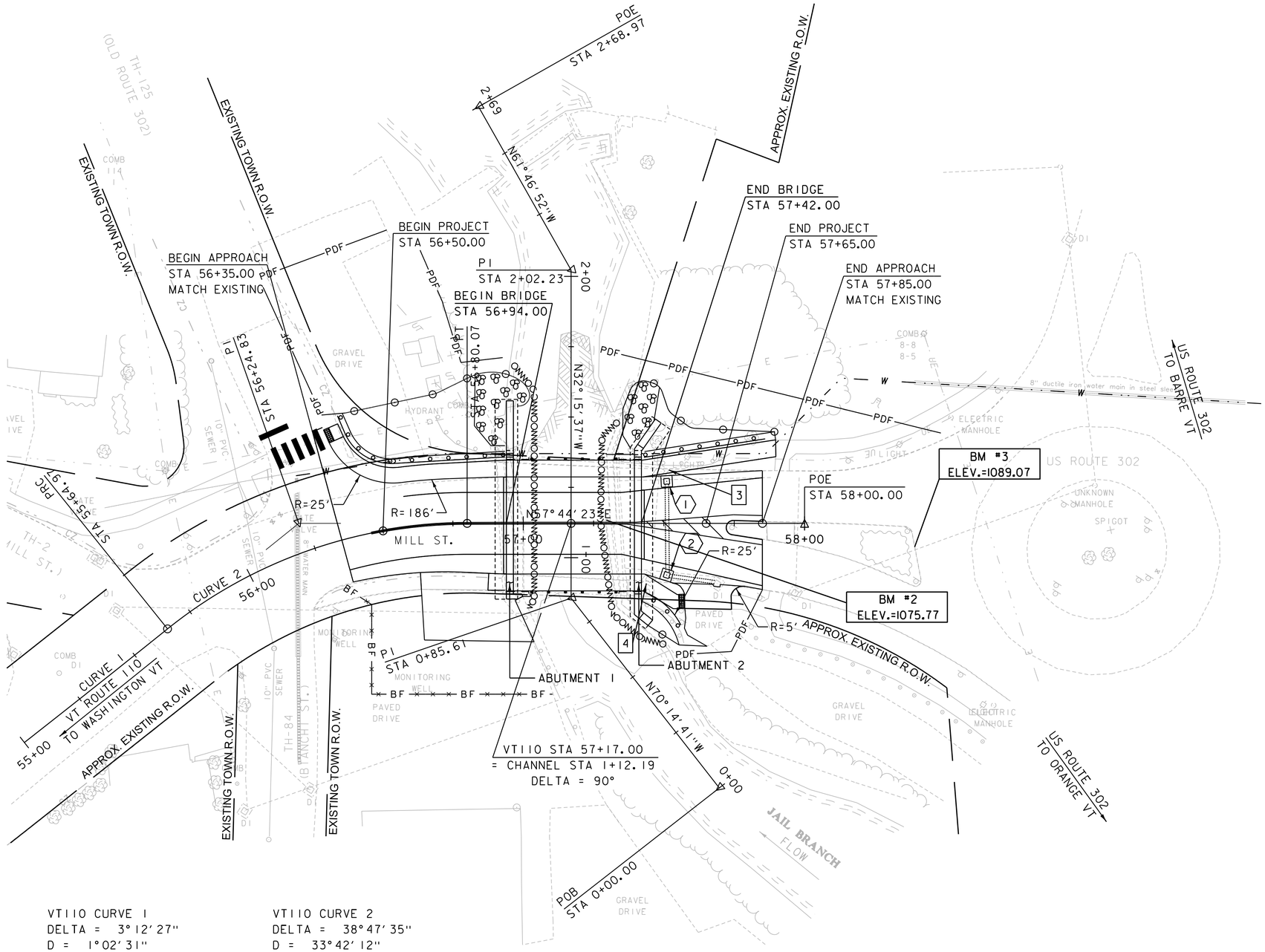

VT110 CURVE 1
DELTA = 3°12'27"
D = 1°02'31"
R = 5498.20'
T = 153.95'
L = 307.81'
E = 2.15'
BRG BHD = N22°09'14.68"E

VT110 CURVE 2
DELTA = 38°47'35"
D = 33°42'12"
R = 170.00'
T = 59.86'
L = 115.10'
E = 10.23'
BRG AHD = N57°44'23"E

SCALE 1" = 20'-0"
20 0 20

McFarland Johnson

PROJECT NAME: BARRE TOWN	
PROJECT NUMBER: BF 0169(12)	
FILE NAME: zl2c576bdr_nul.dgn	PLOT DATE: 1/14/2022
PROJECT LEADER: D. KULL	DRAWN BY: M. LOVETT
DESIGNED BY: S. LISTER	CHECKED BY: B. COLBURN
LAYOUT SHEET	SHEET 14 OF 50

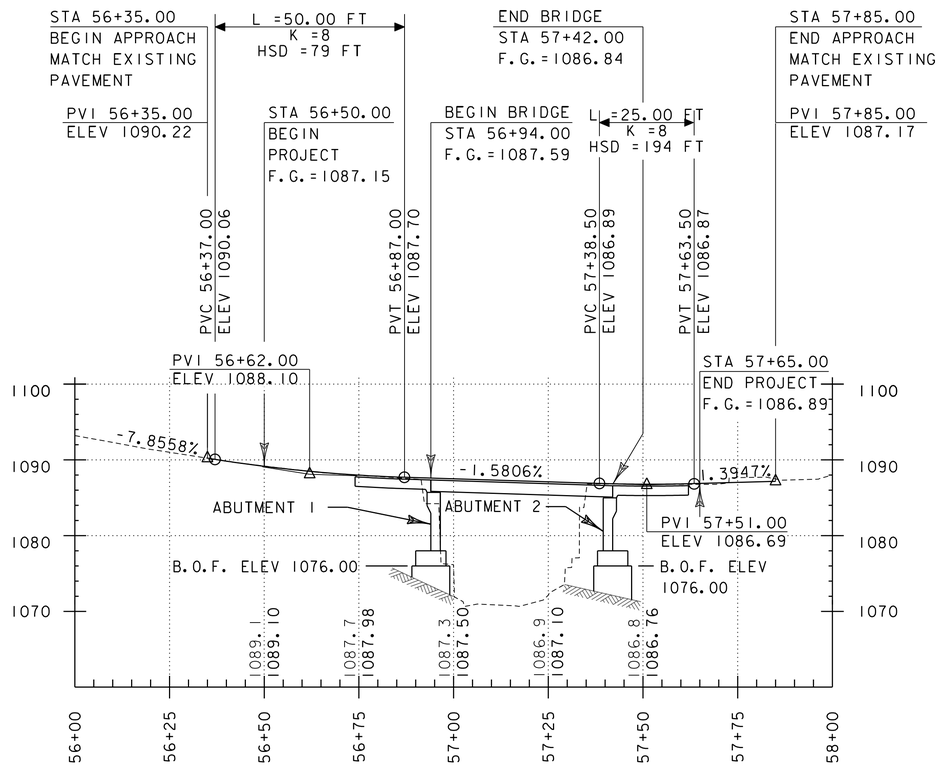

VT RTE 110 (WASHINGTON ST.) PROFILE

SCALE: HORIZONTAL 1"=20'-0"
VERTICAL 1"=10'-0"

THE ELEVATIONS SHOWN TO THE NEAREST HUNDREDTH ARE FOR THE PROPOSED FINISHED GRADE ALONG THE CENTERLINE.

THE ELEVATIONS SHOWN TO THE NEAREST TENTH ARE FOR EXISTING GROUND ALONG THE CENTERLINE.

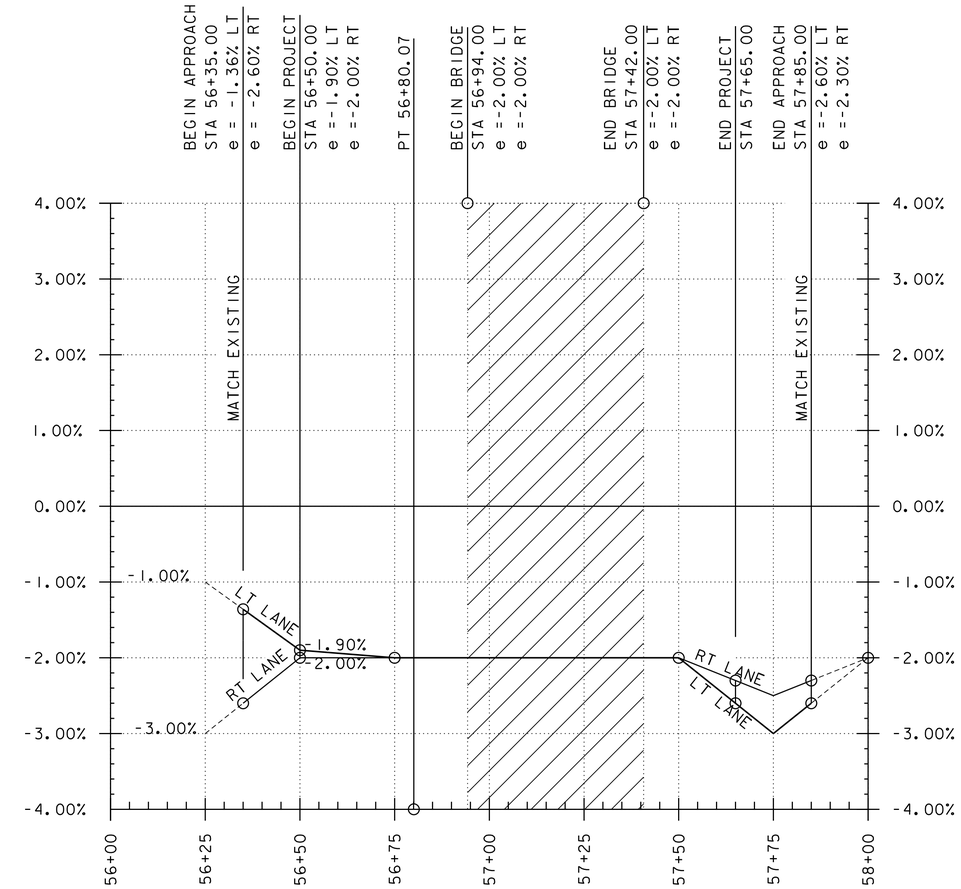

BANKING DIAGRAM

SCALE: 1"=20' (H)
1"=1% (V)

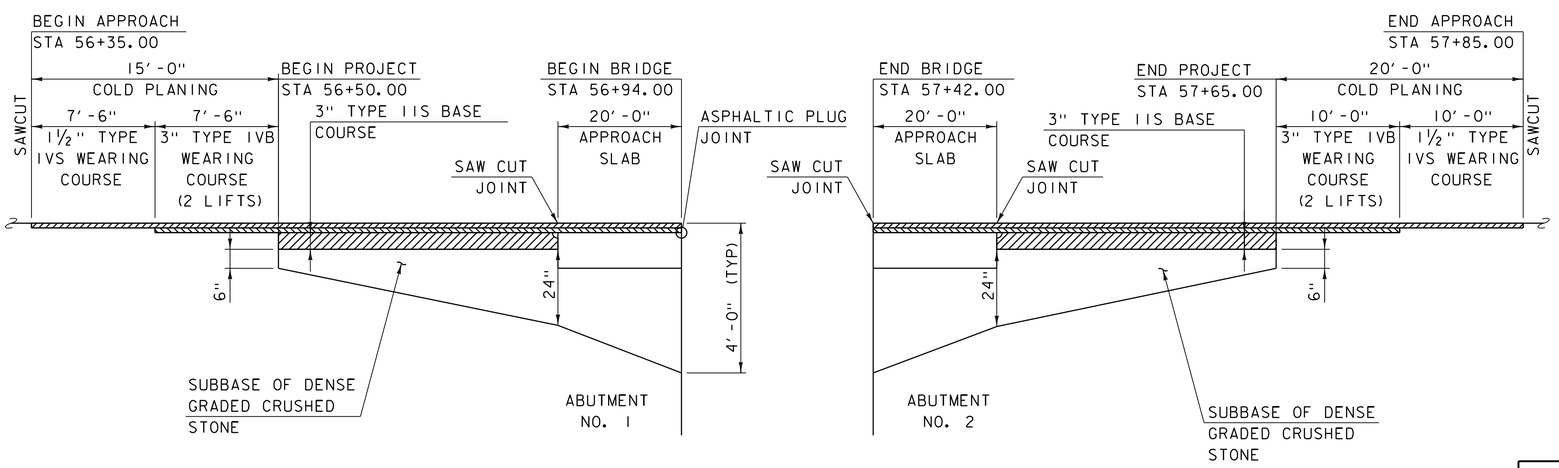

MATERIAL TRANSITION DETAIL

NOT TO SCALE

McFarland Johnson

PROJECT NAME: BARRE TOWN	
PROJECT NUMBER: BF 0169(12)	
FILE NAME: z12c576prof.dgn	PLOT DATE: 1/14/2022
PROJECT LEADER: D. KULL	DRAWN BY: M. LOVETT
DESIGNED BY: S. LISTER	CHECKED BY: S. IRELAND
PROFILE, BANKING, & MATERIAL TRANSITION	SHEET 15 OF 50

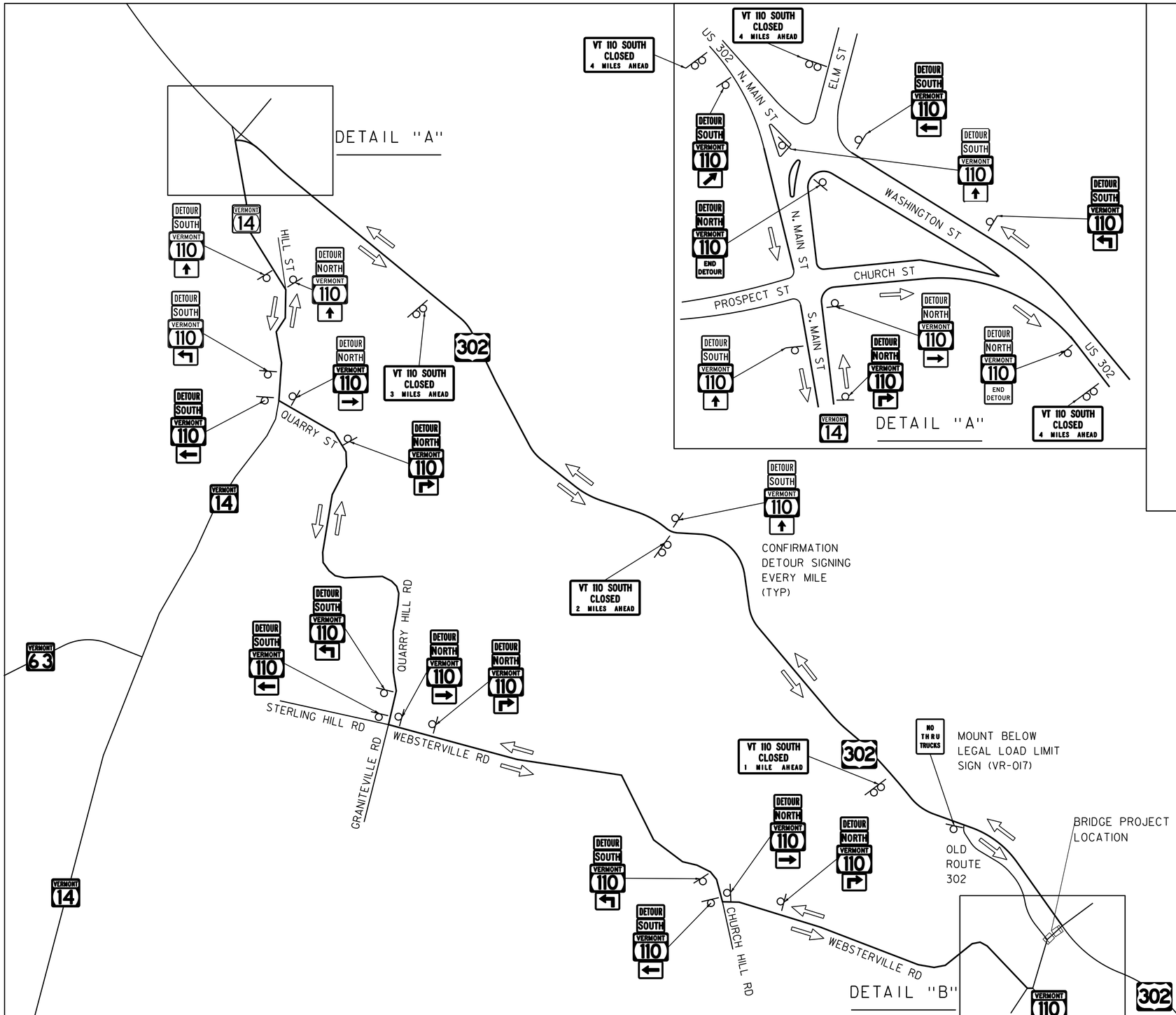

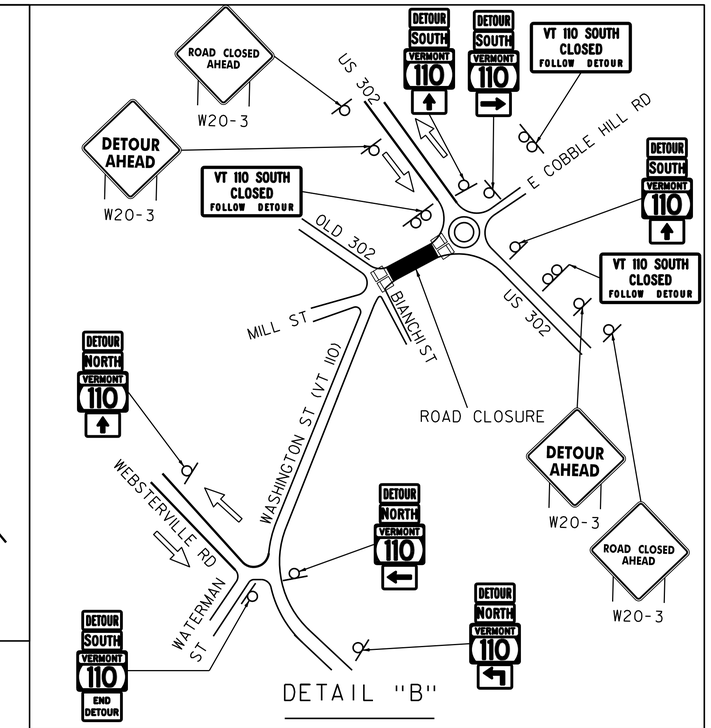

LEGEND

- TYPE III BARRICADE
- PROJECT AREA

NOTES

1. FOR TRAFFIC CONTROL NOTES, SEE SHEET 20.
2. THROUGH LENGTH : 0.1 MILES
   DETOUR LENGTH : 6.3 MILES
   60 DAY PROPOSED CLOSURE
   ADDITIONAL LENGTH : 6.2 MILES
   END TO END LENGTH : 6.3 MILES
3. DETOUR ROUTE CONFIRMATION SIGNS ARE NEEDED AFTER EACH MAJOR INTERSECTION AND EVERY MILE ALONG THE DETOUR ROUTE IN BOTH DIRECTIONS OF TRAVEL.
4. TYPE III BARRICADES SHALL BE INSTALLED AT BOTH PROJECT LIMITS ON VERMONT 110

REGIONAL DETOUR PLAN

McFarland Johnson

PROJECT NAME: BARRE TOWN	
PROJECT NUMBER: BF 0169(12)	
FILE NAME: zl2c576tcp_det.dgn	PLOT DATE: 1/14/2022
PROJECT LEADER: D. KULL	DRAWN BY: S. LISTER
DESIGNED BY: S. LISTER	CHECKED BY: S. IRELAND
REGIONAL DETOUR PLAN SHEET	SHEET 16 OF 50

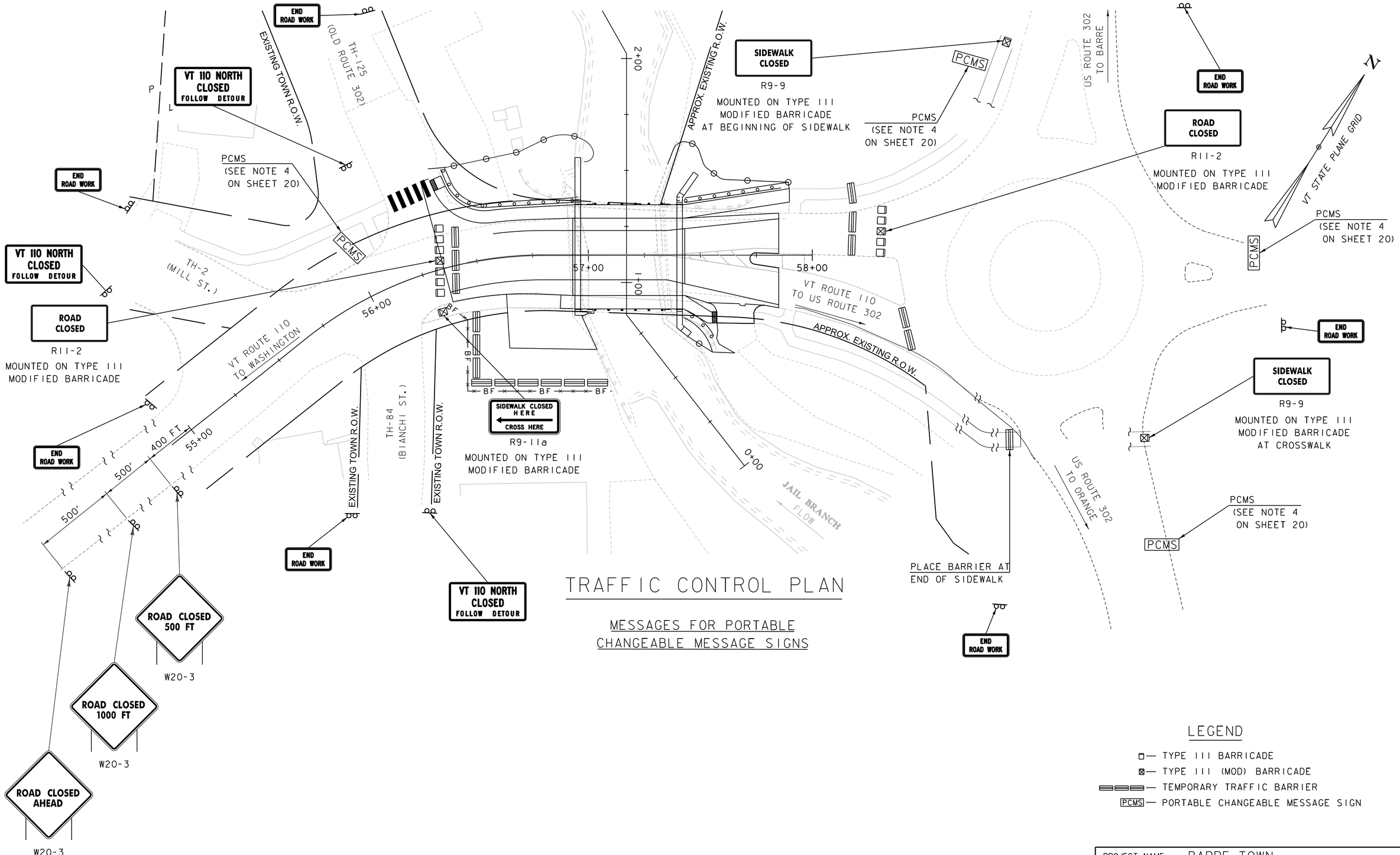

TRAFFIC CONTROL PLAN

MESSAGES FOR PORTABLE CHANGEABLE MESSAGE SIGNS

LEGEND

- TYPE III BARRICADE
- TYPE III (MOD) BARRICADE
- TEMPORARY TRAFFIC BARRIER
- PCMS — PORTABLE CHANGEABLE MESSAGE SIGN

SCALE 1" = 20'-0"
20 0 20

McFarland Johnson

PROJECT NAME: BARRE TOWN	
PROJECT NUMBER: BF 0169(12)	
FILE NAME: z12c576tcp.dgn	PLOT DATE: 1/14/2022
PROJECT LEADER: D. KULL	DRAWN BY: M. LOVETT
DESIGNED BY: S. LISTER	CHECKED BY: S. IRELAND
TRAFFIC CONTROL PLAN SHEET	SHEET 17 OF 50

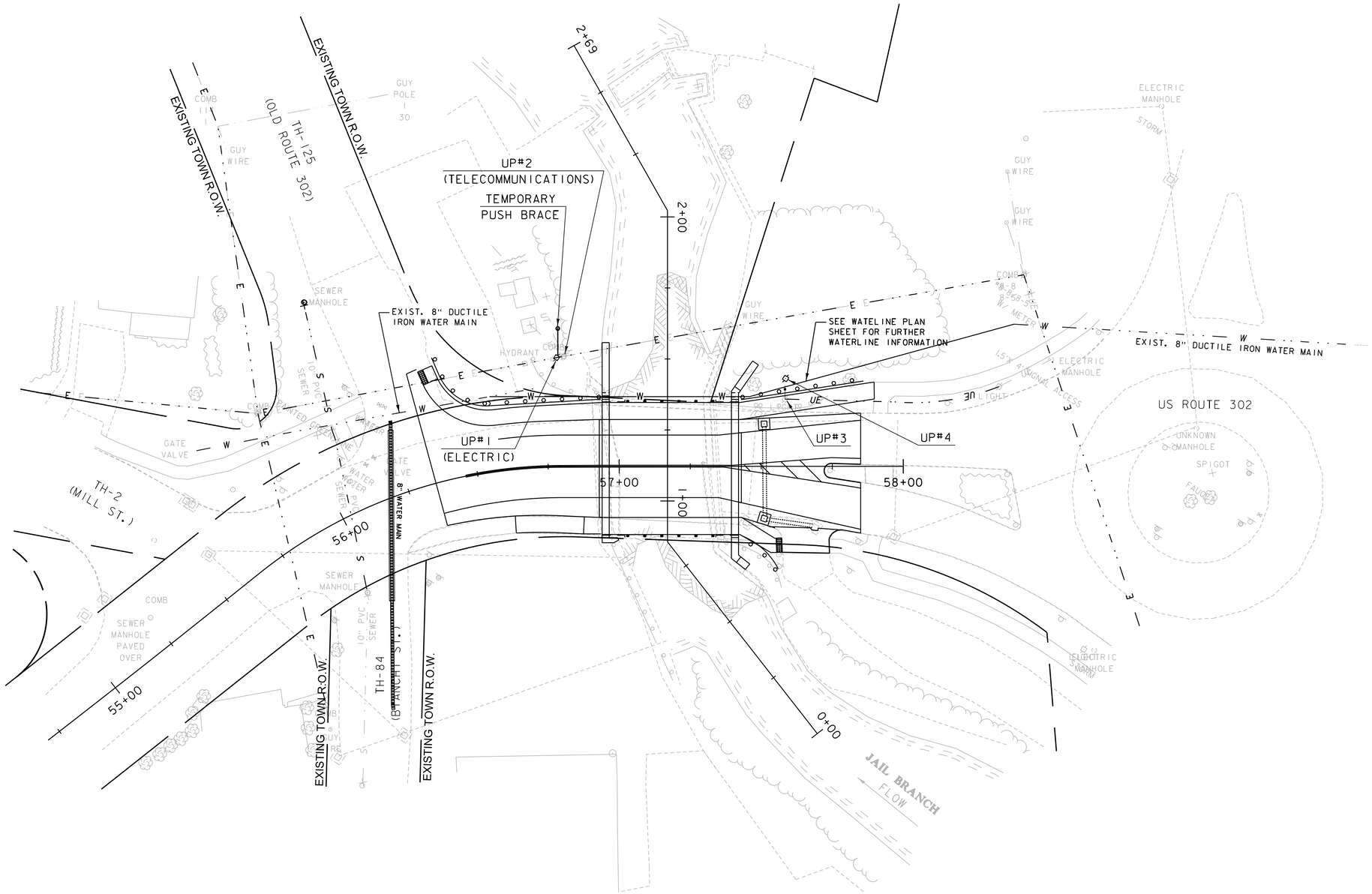

MARK	STATION	OFFSET	NORTHING	EASTING	REMARKS	POLE NUMBER
UP#1	56+78.5	39.0' LT	605284.0	1653723.5	GREEN MOUNTAIN POWER TO ALLEY ARM CONDUCTOR TO BACK SIDE OF POLE PRIOR TO CONSTRUCTION. POLE TO BE TEMPORARILY BRACED DURING CONSTRUCTION WITH TEMPORARY PUSH BRACE	TBD
UP#2	56+80.5	39.0' LT	605286.0	1653725.5	TO BE TEMPORARILY BRACED DURING CONSTRUCTION. EXISTING GUY WIRE TO BE TEMPORARILY REMOVED DURING CONSTRUCTION.	TBD
UP#3	57+58.5	23.5' LT	605315.0	1653799.5	REMOVE EXISTING STREET LIGHT ASSEMBLY	---
UP#4	57+58.5	31.0' LT	605321.0	1653796.0	NEW STREET LIGHT ASSEMBLY	---

SCALE 1" = 20'-0"
20 0 20

McFarland Johnson

PROJECT NAME: BARRE TOWN
PROJECT NUMBER: BF 0169(12)

FILE NAME: z12c576bdr_uty.dgn
PROJECT LEADER: D. KULL
DESIGNED BY: S. LISTER
UTILITY RELOCATION SHEET

PLOT DATE: 1/14/2022
DRAWN BY: S. MERKWAN
CHECKED BY: S. IRELAND
SHEET 18 OF 50

DURABLE 4 INCH WHITE LINE, POLYUREA
STA 56+60.2 - STA 57+85.0 LT
STA 56+35.0 - STA 57+85.0 RT

DURABLE CROSSWALK MARKING, POLYUREA
STA 56+19.9 - STA 56+39.9 LT

DURABLE 24 INCH STOP BAR, POLYUREA
STA 56+19.9 - STA 56+28.5 LT (EXISTING STOP BAR)

REMOVAL OF EXISTING PAVEMENT MARKINGS
STA 56+16.1- STA 56+30.9 LT

RESETTING SIGNS AS SHOWN
STA 57+38 LT
STA 57+47 LT
STA 57+56 RT
STA 57+56 RT
STA 57+74 CL

DURABLE 4 INCH YELLOW LINE, POLYUREA
STA 56+45 - STA 57+85 CENTERLINE
STA 57+43 - STA 57+72 GORE

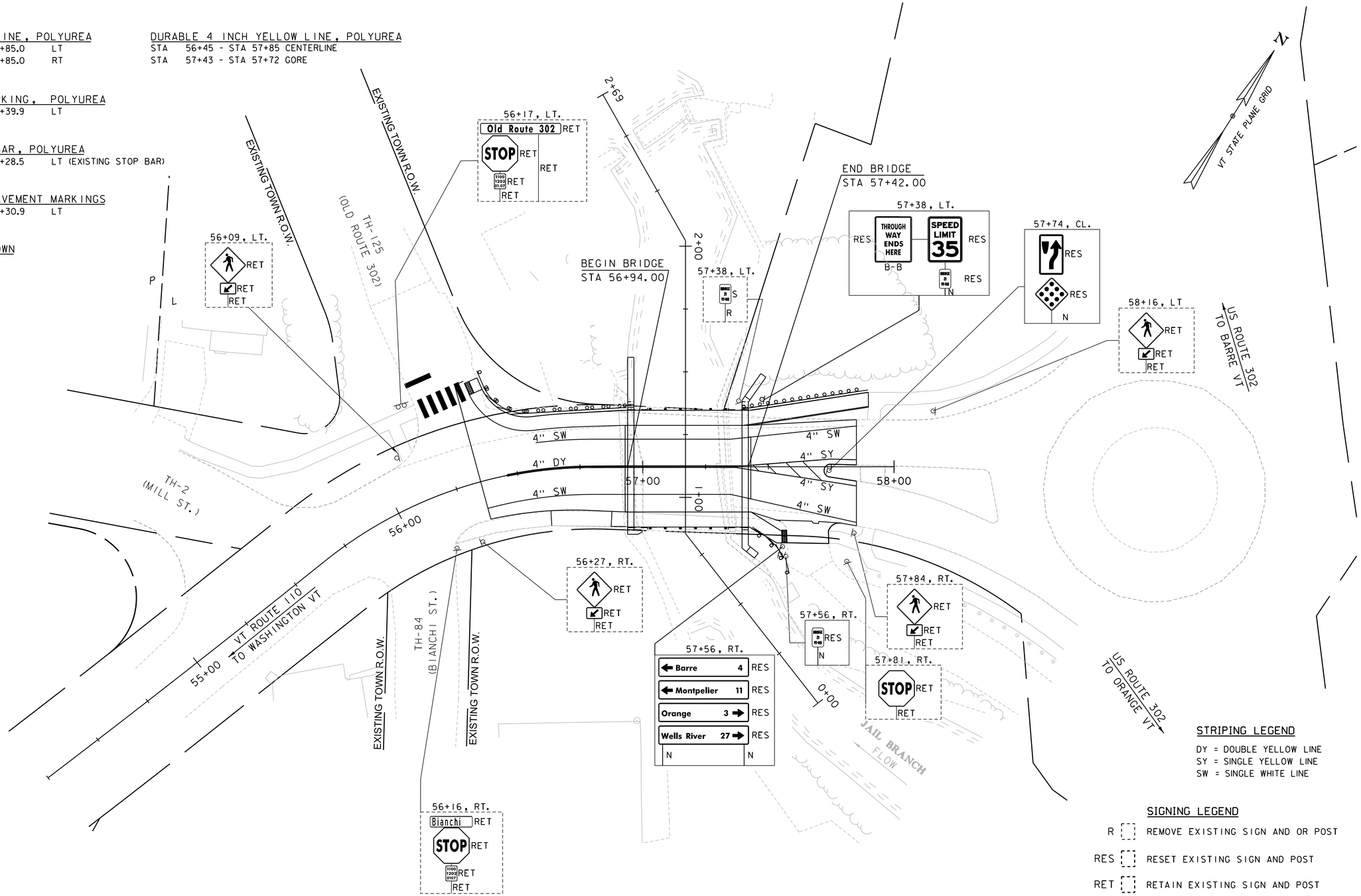

STRIPING LEGEND

DY = DOUBLE YELLOW LINE
SY = SINGLE YELLOW LINE
SW = SINGLE WHITE LINE

SIGNING LEGEND

R REMOVE EXISTING SIGN AND OR POST
RES RESET EXISTING SIGN AND POST
RET RETAIN EXISTING SIGN AND POST
N NEW SIGN AND/OR POST

SCALE 1" = 20'-0"
20 0 20

McFarland Johnson

PROJECT NAME: BARRE TOWN	
PROJECT NUMBER: BF 0169(12)	
FILE NAME: z12c576sign.dgn	PLOT DATE: 1/14/2022
PROJECT LEADER: D. KULL	DRAWN BY: M. LOVETT
DESIGNED BY: S. LISTER	CHECKED BY: S. IRELAND
SIGNING AND STRIPING PLAN	SHEET 19 OF 50

TEMPORARY TRAFFIC SIGN SUMMARY

ID NUMBER	SIGN TEXT	SIZE OF SIGN WIDTH (IN)	SIZE OF SIGN HEIGHT (IN)	NUMBER OF SIGNS REQ'D	AREA OF EACH SIGN (SF)	COLOR	REMARKS
M4-8	DETOUR	24	12	36	2.0	BLACK AND FLUORESCENT ORANGE	MOUNT ABOVE M3-2 OR M3-4
M3-2	NORTH	24	12	17	2.0	GREEN AND WHITE	MOUNT ABOVE M1-6
M3-4	SOUTH	24	12	19	2.0	GREEN AND WHITE	MOUNT ABOVE M1-6
M1-6	VERMONT 110	30	24	36	5.0	GREEN AND WHITE	
M6-3	↑	21	15	16	2.19	BLACK AND FLUORESCENT ORANGE	MOUNT BELOW M1-6
M6-1R	→	21	15	5	2.19	BLACK AND FLUORESCENT ORANGE	MOUNT BELOW M1-6
M5-1R	↱	21	15	4	2.19	BLACK AND FLUORESCENT ORANGE	MOUNT BELOW M1-6
M6-1L	←	21	15	5	2.19	BLACK AND FLUORESCENT ORANGE	MOUNT BELOW M1-6
M5-1L	↰	21	15	5	2.19	BLACK AND FLUORESCENT ORANGE	MOUNT BELOW M1-6
M6-2R	↗	21	15	1	2.19	BLACK AND FLUORESCENT ORANGE	MOUNT BELOW M1-6
M4-8a	END DETOUR	24	18	3	3.0	BLACK AND FLUORESCENT ORANGE	MOUNT BELOW M1-6
W20-2	ROAD CLOSED AHEAD	48	48	3	24.0	BLACK AND FLUORESCENT ORANGE	INSTALL ON 2 POSTS
W20-2	DETOUR AHEAD	48	48	2	24.0	BLACK AND FLUORESCENT ORANGE	INSTALL ON 2 POSTS
W20-3	ROAD CLOSED 500 FT	48	48	1	24.0	BLACK AND FLUORESCENT ORANGE	INSTALL ON 2 POSTS
W20-3	ROAD CLOSED 1000 FT	48	48	1	24.0	BLACK AND FLUORESCENT ORANGE	INSTALL ON 2 POSTS
R5-XY	NO THRU TRUCKS	24	30	1	5.0	BLACK AND WHITE	MOUNT BELOW VR-017
R9-9	SIDEWALK CLOSED	24	12	2	2.0	BLACK AND WHITE	INSTALL ON TYPE III BARRICADE
R9-11a	SIDEWALK CLOSED ← CROSS HERE	24	12	1	2.0	BLACK AND WHITE	INSTALL ON TYPE III BARRICADE
R11-2	ROAD CLOSED	48	30	2	10.0	BLACK AND FLUORESCENT ORANGE	INSTALL ON 2 POSTS
R11-3a	VT 110 SOUTH CLOSED FOLLOW DETOUR	60	30	3	12.5	BLACK AND FLUORESCENT ORANGE	INSTALL ON 2 POSTS
R11-3a	VT 110 NORTH CLOSED FOLLOW DETOUR	60	30	3	12.5	BLACK AND FLUORESCENT ORANGE	INSTALL ON 2 POSTS
R11-3a	VT 110 SOUTH CLOSED 4 MILES AHEAD	60	30	3	12.5	BLACK AND FLUORESCENT ORANGE	INSTALL ON 2 POSTS
R11-3a	VT 110 SOUTH CLOSED 3 MILES AHEAD	60	30	1	12.5	BLACK AND FLUORESCENT ORANGE	INSTALL ON 2 POSTS
R11-3a	VT 110 SOUTH CLOSED 2 MILES AHEAD	60	30	1	12.5	BLACK AND FLUORESCENT ORANGE	INSTALL ON 2 POSTS
R11-3a	VT 110 SOUTH CLOSED 1 MILE AHEAD	60	30	1	12.5	BLACK AND FLUORESCENT ORANGE	INSTALL ON 2 POSTS
G20-2	END ROAD WORK	36	18	7	4.5	BLACK AND FLUORESCENT ORANGE	INSTALL ON 2 POSTS

VT110 TRAFFIC CONTROL NOTES

1. A PUBLIC OUTREACH COORDINATOR SHALL BE USED FOR PUBLICIZING AND COORDINATING DETOUR INFORMATION, INCLUDING (BUT NOT LIMITED TO) ADVANCED NOTICE OF DETOUR START, ANTICIPATED DURATION AND TRAFFIC DELAYS FOR THE PUBLIC. THE CONTRACTOR SHALL COORDINATE WITH THE PUBLIC OUTREACH COORDINATOR AS NEEDED.

2. PORTABLE CHANGEABLE MESSAGE SIGNS "PCMS" SHALL BE PLACED AT THE APPROXIMATE LOCATIONS SHOWN ON THE PLANS OR WHERE DESIGNATED BY THE ENGINEER. TWO SIGNS SHALL BE PLACED AT THE BRIDGE 14 DAYS PRIOR TO THE ROAD CLOSURE TO WARN OF THE IMPENDING CLOSURE & DETOURS, THEN BE MOVED OUT TO THE START OF DETOUR. PCMS SHALL BE PLACED OFF THE EDGE OF THE ROAD, OUTSIDE THE CLEAR ZONE AS DEFINED IN THE ROADSIDE DESIGN GUIDE, BUT SHALL BE VISIBLE FROM THE ROADWAY.

3. INSTALLATION OF DETOUR AND ON-SITE SIGNS SHALL NOT BLOCK ANY EXISTING TRAFFIC CONTROL SIGN ASSEMBLIES AND SHALL MODIFY OR BE PLACED ADJACENT TO EXISTING ROUTE MARKER SIGN ASSEMBLIES WHEN POSSIBLE. THE CONTRACTOR SHOULD MAINTAIN AT LEAST 200 FEET BETWEEN SIGN ASSEMBLIES WHENEVER POSSIBLE. ALL SIGN COVERINGS SHALL NOT DAMAGE THE RETROREFLECTIVITY OF THE COVERED SIGN FACE, SIGN COVERING SHALL NOT DETERIORATE FOR THE DURATION THAT THE SIGN IS COVERED.

4. EXISTING SIGNS THAT ARE IN CONFLICT WITH THE TRAFFIC FLOW OF THE DETOUR SHALL BE REMOVED OR COVERED BY THE CONTRACTOR, AS DIRECTED BY THE ENGINEER. ALL SIGNS REMOVED OR COVERED SHALL BE REPLACED OR UNCOVERED WHEN THE TRAFFIC CONTROL PACKAGE IS DISASSEMBLED.

5. CONTACT DIG-SAFE AT 1-888-344-7233 PRIOR TO BREAKING GROUND TO INSTALL ANY SIGN POSTS.

PCMS

MESSAGE 1	MESSAGE 2	
VT 110	MMMM DD	✳
ROAD	THRU	
CLOSED	MMMM DD	✳

✳ MONTH SHALL BE SPELLED OUT MAY 1, NOT 5/1

TEMPORARY TRAFFIC SIGN SUMMARY NOTES:

THE ESTIMATED QUANTITIES OF "PERMANENT CONTROLS" ARE HEREBY LISTED. ADDITIONAL SIGNS REQUIRED FOR THE CONSTRUCTION APPROACHES ARE SHOWN ON STANDARD DETAIL T-10. THE CONTRACTOR IS RESPONSIBLE FOR ALL "OPERATIONAL CONTROLS" REQUIRED UNDER SECTION 641 OF THE 2018 VTRANS SPECIFICATIONS AND THE MANUAL ON UNIFORM TRAFFIC CONTROL DEVICES (MUTCD), PART VI LATEST EDITION.

McFarland Johnson

PROJECT NAME: BARRE TOWN
PROJECT NUMBER: BF 0169(12)

FILE NAME: z12c576sum_sgn.dgn
PROJECT LEADER: D. KULL
DESIGNED BY: S. LISTER
SIGN SUMMARY & TRAFFIC CONTROL NOTES

PLOT DATE: 1/14/2022
DRAWN BY: S. LISTER
CHECKED BY: S. IRELAND
SHEET 20 OF 50

SOIL CLASSIFICATION

AASHTO	
A1	Gravel and Sand
A3	Fine Sand
A2	Silty or Clayey Gravel and Sand
A4	Silty Soil - Low Compressibility
A5	Silty Soil - Highly Compressible
A6	Clayey Soil - Low Compressibility
A7	Clayey Soil - Highly Compressible

ROCK QUALITY DESIGNATION

R.Q.D. (%)	ROCK DESCRIPTION
<25	Very Poor
25 to 50	Poor
51 to 75	Fair
76 to 90	Good
>90	Excellent

SHEAR STRENGTH

UNDRAINED SHEAR STRENGTH IN P.S.F.	CONSISTENCY
<250	Very Soft
250-500	Soft
500-1000	Med. Stiff
1000-2000	Stiff
2000-4000	Very Stiff
>4000	Hard

CORRELATION GUIDE OF "N" TO DENSITY/CONSISTENCY

DENSITY (GRANULAR SOILS)		CONSISTENCY (COHESIVE SOILS)	
N	DESCRIPTIVE TERM	N	DESCRIPTIVE TERM
<5	Very Loose	<2	Very Soft
5-10	Loose	2-4	Soft
11-24	Med. Dense	5-8	Med. Stiff
25-50	Dense	9-15	Stiff
>50	Very Dense	16-30	Very Stiff
		31-60	Hard
		>60	Very Hard

COMMONLY USED SYMBOLS

▼	Water Elevation
⊗	Standard Penetration Boring
⊕	Auger Boring
⊙	Rod Sounding
S	Sample
N	Standard Penetration Test Blow Count Per Foot For: 2" O.D. Sampler 1 3/8" I.D. Sampler Hammer Weight Of 140 Lbs. Hammer Fall Of 30"
VS	Field Vane Shear Test
US	Undisturbed Soil Sample
B	Blast
DC	Diamond Core
MD	Mud Drill
WA	Wash Ahead
HSA	Hollow Stem Auger
AX	Core Size 1 1/8"
BX	Core Size 1 5/8"
NX	Core Size 2 1/8"
M	Double Tube Core Barrel Used
LL	Liquid Limit
PL	Plastic Limit
PI	Plasticity Index
NP	Non Plastic
w	Moisture Content (Dry Wgt. Basis)
D	Dry
M	Moist
MTW	Moist To Wet
W	Wet
Sat	Saturated
Bo	Boulder
Gr	Gravel
Sa	Sand
Si	Silt
Cl	Clay
HP	Hardpan
Le	Ledge
NLTD	No Ledge To Depth
CNPF	Can Not Penetrate Further
TLOB	Top of Ledge Or Boulder
NR	No Recovery
Rec.	Recovery
%Rec.	Percent Recovery
RQD	Rock Quality Designation
CBR	California Bearing Ratio
<	Less Than
>	Greater Than
R	Refusal (N > 100)
VTSPG	NAD83 - See Note 7

COLOR

blk	Black	pnk	Pink
bl	Blue	pu	Purple
brn	Brown	rd	Red
dk	Dark	tn	Tan
gry	Gray	wh	White
gn	Green	yel	Yellow
lt	Light	mltc	Multicolored
or	Orange		

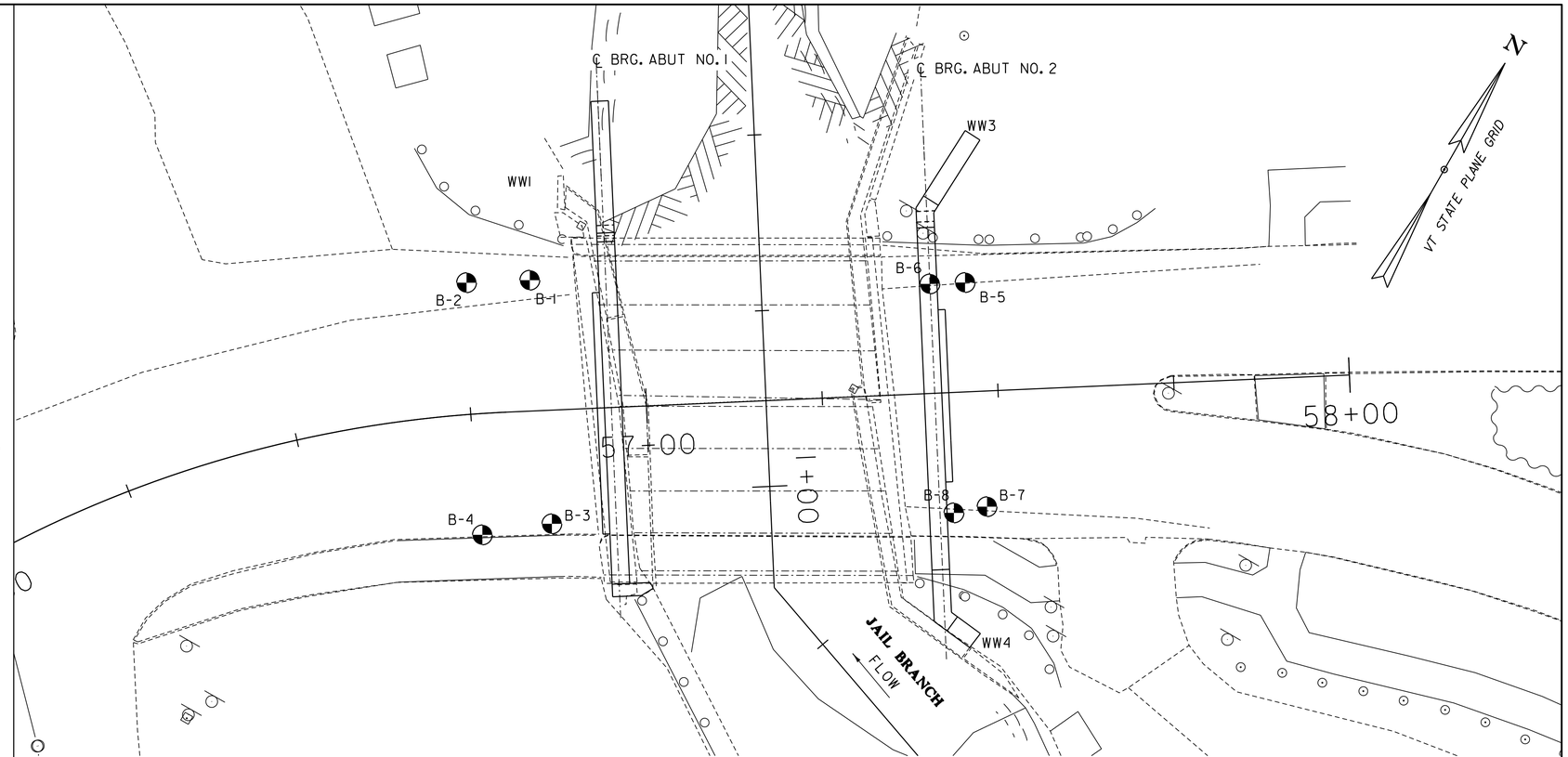

BORING CHART

HOLE NO.	BASELINE STATION	OFFSET	GROUND ELEV.	ELEV TLOB (FT.)	NORTHING	EASTING
B-1	56+84	19' LT.	1088.0	1074.6	605271.09	1653739.49
B-2	56+76	19' LT.	1088.0	N/A	605266.32	1653731.86
B-3	56+86	16' RT.	1088.0	1076.0	605242.58	1653759.39
B-4	56+75	17' RT.	1088.0	N/A	605236.32	1653751.59
B-5	57+46	16' LT.	1086.5	N/A	605301.48	1653793.37
B-6	57+41	16' LT.	1086.0	1070.9	605298.83	1653789.13
B-7	57+48	16' RT.	1086.5	N/A	605275.37	1653811.88
B-8	57+43	17' RT.	1086.0	1071.0	605272.27	1653808.23

BORING LAYOUT

10 0 10

SCALE: 1" = 10'-0"

DEFINITIONS (AASHTO)

BEDROCK (LEDGE) - Rock in its native location of indefinite thickness.

BOULDER - A rock fragment with an average dimension > 12 inches.

COBBLE - Rock fragments with an average dimension between 3 and 12 inches.

GRAVEL - Rounded particles of rock < 3" and > 0.0787" (#10 sieve).

SAND - Particles of rock < 0.0787" (#10 sieve) and > 0.0029" (#200 sieve).

SILT - Soil < 0.0029" (#200 sieve), non or slightly plastic and exhibits no strength when air-dried.

CLAY - Fine grained soil, exhibits plasticity when moist and considerable strength when air-dried.

VARVED - Alternate layers of silt and clay.

HARDPAN - Extremely dense soil, cemented layer, not softened when wet.

MUCK - Soft organic soil (containing > 10% organic material.

MOISTURE CONTENT - Weight of water divided by dry weight of soil.

FLOWING SAND - Granular soil so saturated (loose) that it flows into drill casing during extraction of wash rod.

STRIKE - Angle from magnetic north to line of intersection of bed with a horizontal plane.

DIP - Inclination of bed with a horizontal plane.

GENERAL NOTES

1. The subsurface explorations shown herein were made between 11/30/20 and 12/03/20 by GZA.
2. Soil and rock classifications, properties and descriptions are based on engineering interpretation from available subsurface information by the Agency and may not necessarily reflect actual variations in subsurface conditions that may be encountered between individual boring or sample locations.
3. Observed water levels and/or conditions indicated are as recorded at the time of exploration and may vary according to the prevailing rainfall, methods of exploration and other factors.
4. Engineering judgment was exercised in preparing the subsurface information presented herein. Analysis and interpretation of subsurface data was performed and interpreted for Agency design and estimating purposes. Presentation of the information in the Contract is intended to provide the Contractor access to the same data available to the Agency. The subsurface information is presented in good faith and is not intended as a substitute for personal investigation, independent interpretation, independent analysis or judgment by the Contractor.
5. Pictorial structure details shown on the boring plan layout or soils profile are for illustrative purposes only and may not accurately portray final contract details.
6. Terminology used on boring logs to describe the hardness, degree of weathering, and spacing of fractures, joints and other discontinuities in the bedrock is defined in the AASHTO Manual on Subsurface Investigations, 1988.
7. Northing and Easting coordinates are shown in Vermont State Plane Grid North American Datum 1983 in meters and survey feet.

McFarland Johnson

PROJECT NAME: BARRE TOWN
PROJECT NUMBER: BF 0169(12)

FILE NAME: z12c576bor_lay.dgn
PROJECT LEADER: D. KULL
DESIGNED BY: T. AGUILAR
BORING LAYOUT SHEET

PLOT DATE: 1/14/2022
DRAWN BY: S. MERKWAN
CHECKED BY: R. JOY
SHEET 21 OF 50

STATE OF VERMONT
AGENCY OF TRANSPORTATION
CONSTRUCTION AND
MATERIALS BUREAU
CENTRAL LABORATORY

BORING LOG

Bridge No. 21 Replacement Project
Barre Town BF 0169(12)
Barre, Vermont

Boring No.: B-1
Page No.: 1 of 1
Pin No.: 12C576
Checked By: D. Lamothe

Boring Crew: M. D'Ambrosio (NEBC), J. Szmyt (GZA)
Date Started: 11/30/20 Date Finished: 11/30/20
VTSPG NAD83: N 605271.09 ft E 1653739.49 ft
Station: 56+84 Offset: 18 LT
Ground Elevation: 1088.0 ft

	Casing	Sampler
Type:	WASH BORE	SS
I.D.:	4 in	2 in
Hammer Wt:	300 lb.	140 lb.
Hammer Fall:	24 in.	30 in.
Hammer/Rod Type:	Auto/AWJ	
Rig:	Versadrill GT8 TRUCK	CE = 1.3

Groundwater Observations

Date	Depth (ft)	Notes
11/30/20	13.3	Stab. time = 0.25 hrs.

Depth (ft)	Strata (1)	CLASSIFICATION OF MATERIALS (Description)	Blows/6" (N Value)	Moisture Content %	Gravel %	Sand %	Fines %
		Visual Description, Approximately 10 inches of pavement, ASPHALT					
		Visual Description, (Modified Burmister), S-1 (0.8-2.8'): Medium dense, brown, fine to medium SAND, little Gravel, trace Silt (A-1-a). Moist. ND, Rec. = 1.08 ft, FILL	10-11-9-9 (20)				
		Visual Description, (Modified Burmister), S-2 (2.8-4.8'): Medium dense, brown, fine to medium SAND, little Gravel, trace Silt (A-1-a). Moist. ND, Rec. = 0.67 ft, FILL	8-7-6-7 (13)				
5		Visual Description, (Modified Burmister), S-3 (4.8-6.8'): Medium dense, brown, fine to medium SAND, little Silt, trace Gravel, trace Wood (A-1-b). Moist. ND, Rec. = 1.0 ft, FILL	6-8-5-71 (13)				
		Visual Description, (Modified Burmister), S-4 (6.8-8.8'): Very dense, brown, fine to medium SAND, little Silt, trace Gravel (A-1-b). Moist. ND, Rec. = 1.08 ft, FILL	92-36-17-9 (53)				
		Visual Description, FILL	4-5-3-4 (8)				
10		Visual Description, (Modified Burmister), S-5 (9.0-11.0'): Loose, brown, fine to coarse SAND, some Gravel, little Silt (A-1-b). Wet. 238 ppm, Rec. = 0.33 ft, FILL					
		Visual Description, (Modified Burmister), S-6 (11.0-13.0'): Medium dense, brown, fine to medium SAND, little Silt, trace Gravel (A-1-b). Wet. ND, Rec. = 0.67 ft, FILL	6-5-6-8 (11)				
		Visual Description, (Modified Burmister), S-7 (13.0-13.4'): Very dense, brown, fine to coarse SAND, little Gravel, trace Silt (A-1-a). Wet. ND, Rec. = 0.42 ft, FILL	100/5" (REF)				
15		Advanced 3-inch-diameter roller bit into probable bedrock, 13.4 ft - 15.0 ft					
		Hole stopped @ 15.0 ft					

ABUTMENT NO 1
BOTTOM OF FTG.
EL 1076.00

Remarks:
1. Soil samples were screened for total volatile organic compounds (VOCs) using a Tiger photoionization detector with 10.6eV bulb, referenced to an isobutylene-in-air standard. Total VOCs detected are reported in parts per million (ppm). "ND" indicates no VOCs detected above background.
2. Due to low sample recovery from sample S-5 which consisted primarily of gravel, VOC grab sample collected from sample S-6. Composite sample obtained from samples S-1 through S-7.

Notes:
1. Stratification lines represent approximate boundary between material types. Transition may be gradual.
2. N Values have not been corrected for hammer energy. CE is the hammer energy correction factor.
3. Water level readings have been made at times and under conditions stated. Fluctuations may occur due to other factors than those present at the time measurements were made.

BORING LOG 04.0191154.03 VTRANS BARRE BF 0169(12).GPJ VERMONT AOT.GDT 1/8/21

STATE OF VERMONT
AGENCY OF TRANSPORTATION
CONSTRUCTION AND
MATERIALS BUREAU
CENTRAL LABORATORY

BORING LOG

Bridge No. 21 Replacement Project
Barre Town BF 0169(12)
Barre, Vermont

Boring No.: B-2
Page No.: 1 of 1
Pin No.: 12C576
Checked By: D. Lamothe

Boring Crew: M. D'Ambrosio (NEBC), J. Szmyt (GZA)
Date Started: 12/01/20 Date Finished: 12/01/20
VTSPG NAD83: N 605266.32 ft E 1653731.86 ft
Station: 56+75 Offset: 19 LT
Ground Elevation: 1088.0 ft

	Casing	Sampler
Type:	WASH BORE	SS
I.D.:	4 in	2 in
Hammer Wt:	300 lb.	140 lb.
Hammer Fall:	24 in.	30 in.
Hammer/Rod Type:	Auto/AWJ	
Rig:	Versadrill GT8 TRUCK	CE = 1.3

Groundwater Observations

Date	Depth (ft)	Notes
12/01/20		Not Encountered

Depth (ft)	Strata (1)	CLASSIFICATION OF MATERIALS (Description)	Blows/6" (N Value)	Moisture Content %	Gravel %	Sand %	Fines %
		Visual Description, Approximately 10 inches of pavement, ASPHALT					
		Visual Description, (Modified Burmister), S-1 (0.8-2.8'): Medium dense, brown, fine to medium SAND, little Silt, trace Gravel (A-1-b). Moist. ND, Rec. = 0.83 ft, FILL	13-15-10-10 (25)				
		Visual Description, (Modified Burmister), S-2 (2.8-4.8'): Dense, brown, fine to medium SAND, little Gravel, little Silt (A-1-b). Moist. ND, Rec. = 0.75 ft, FILL	24-22-13-11 (35)				
5		Visual Description, (Modified Burmister), S-3 (4.8-6.8'): Loose, brown, fine to medium SAND, little Silt, trace Gravel, trace Wood (A-1-b). Moist. ND, Rec. = 1.0 ft, SAND	5-4-2-2 (6)				
		Visual Description, (Modified Burmister), S-4 (6.8-8.8'): No recovery, Rec. = 0.0 ft, SAND	1-2-3-2 (5)				
10		Visual Description, (Modified Burmister), S-5 (8.8-10.8'): Loose, brown, fine to medium SAND, little Silt, trace Gravel (A-1-b). Moist. ND, Rec. = 0.92 ft, SAND	2-2-2-2 (4)				
		Hole stopped @ 10.8 ft					

ABUTMENT NO 1
BOTTOM OF FTG.
EL 1076.00

Remarks:
1. Soil samples were screened for total volatile organic compounds (VOCs) using a Tiger photoionization detector with 10.6eV bulb, referenced to an isobutylene-in-air standard. Total VOCs detected are reported in parts per million (ppm). "ND" indicates no VOCs detected above background.

Notes:
1. Stratification lines represent approximate boundary between material types. Transition may be gradual.
2. N Values have not been corrected for hammer energy. CE is the hammer energy correction factor.
3. Water level readings have been made at times and under conditions stated. Fluctuations may occur due to other factors than those present at the time measurements were made.

BORING LOG 04.0191154.03 VTRANS BARRE BF 0169(12).GPJ VERMONT AOT.GDT 1/8/21

McFarland Johnson

PROJECT NAME: BARRE TOWN
PROJECT NUMBER: BF 0169(12)

FILE NAME: z12c576bor_log.dgn
PROJECT LEADER: D. KULL
DESIGNED BY: S. LISTER
BORING LOGS SHEET NO. 1

PLOT DATE: 1/14/2022
DRAWN BY: S. MERKWAN
CHECKED BY: R. JOY
SHEET 22 OF 50

STATE OF VERMONT
AGENCY OF TRANSPORTATION
CONSTRUCTION AND
MATERIALS BUREAU
CENTRAL LABORATORY

BORING LOG

Bridge No. 21 Replacement Project
Barre Town BF 0169(12)
Barre, Vermont

Boring No.: B-3
Page No.: 1 of 1
Pin No.: 12C576
Checked By: D. Lamothe

Boring Crew: M. D'Ambrosio (NEBC), J. Szmyt (GZA)
Date Started: 12/01/20 Date Finished: 12/01/20
VTSPG NAD83: N 605242.58 ft E 1653759.39 ft
Station: 56+86 Offset: 16 RT
Ground Elevation: 1088.0 ft

	Casing	Sampler
Type:	WASH BORE	SS
I.D.:	4 in	2 in
Hammer Wt:	300 lb.	140 lb.
Hammer Fall:	24 in.	30 in.
Hammer/Rod Type:	Auto/AWJ	
Rig:	Versadrill GT8 TRUCK	CE = 1.3

Groundwater Observations		
Date	Depth (ft)	Notes
12/01/20	10.6	Stab. time = 0.25 hrs.

ABUTMENT NO 1
BOTTOM OF FTG.
EL 1076.00

Depth (ft)	Strata (1)	CLASSIFICATION OF MATERIALS (Description)	Run (Dip deg.)	Core Rec. % (RQD %)	Drill Rate minutes/ft	Blows/6" (N Value)	Moisture Content %	Gravel %	Sand %	Fines %
		Visual Description, Approximately 11 inches of pavement, ASPHALT								
		Visual Description, FILL				7-7-5-3 (12)				
		Visual Description, (Modified Burmister), S-1 (1.0-3.0'): Medium dense, brown, fine to medium SAND, trace Silt, trace Gravel (A-3). Moist. 205 ppm. Petroleum odor, Rec. = 0.83 ft, FILL				2-4-1-3 (5)				
5		Visual Description, (Modified Burmister), S-2 (3.0-5.0'): Loose, brown, fine to medium SAND, little Silt, trace Gravel (A-1-b). Moist. 191 ppm, Rec. = 1.0 ft, FILL				4-1-2-4 (3)				
		Visual Description, (Modified Burmister), S-3 (5.0-7.0'): Very loose, brown, fine to medium SAND, little Gravel, trace Silt (A-1-a). Moist. 32.4 ppm, Rec. = 0.42 ft, FILL				2-18-10-11 (28)				
		Visual Description, (Modified Burmister), S-4 (7.0-9.0'): Medium dense, brown, fine to medium SAND, little Silt, trace Gravel (A-1-b). Moist. 24.5 ppm, Rec. = 0.58 ft, FILL				6-100/6" (REF)				
10		Visual Description, (Modified Burmister), S-5 (9.0-10.0'): Very dense, brown, fine to medium SAND, trace Gravel, trace Silt (A-3). Moist. 35.4 ppm, Rec. = 0.33 ft, FILL				75/4" (REF)				
		Advanced roller bit through cobble, 10.0 ft - 10.5 ft								
		Visual Description, (Modified Burmister), S-6 (10.5-10.8'): Very dense, brown, fine to medium SAND, little Gravel, little Silt (A-1-b). Wet. ND, Rec. = 0.25 ft, FILL								
		Advanced roller bit through cobbles, 10.8 ft - 12.0 ft	C-1	97 (93)	2					
15		Advanced roller bit into bedrock and began coring, 12.0 ft - 13.3 ft			2					
		13.3 ft - 18.3 ft, C-1: Hard, fresh, gray, black and white, fine to medium grained, GRANODIORITE. Joints are low angle, moderately spaced to wide, rough, undulating, discolored, and partially open.			2					
					1.5					
					2					
		18.3 ft - 23.3 ft, C-2: Hard, fresh, gray, black and white, fine to medium grained, GRANODIORITE. Joints are low angle, widely spaced, rough, undulating, fresh, and partially open.	C-2	100 (98)	1.5					
20					2					
					2.5					
					2.5					
					3					
		Hole stopped @ 23.3 ft								
25										
30										

Remarks:
1. Soil samples were screened for total volatile organic compounds (VOCs) using a Tiger photoionization detector with 10.6eV bulb, referenced to an isobutylene-in-air standard. Total VOCs detected are reported in parts per million (ppm). "ND" indicates no VOCs detected above background.
2. VOC and TPH fingerprint grab samples collected from sample S-1. Composite sample obtained from samples S-1 through S-6.
3. Borehole grouted within rock core runs and backfilled with drill cuttings for remainder of borehole.
4. Bedrock testing completed on C-1 (13.3-14.5 ft.) sample, UCS = 13.8 ksi, unit weight = 162.7 pcf.

Notes:
1. Stratification lines represent approximate boundary between material types. Transition may be gradual.
2. N Values have not been corrected for hammer energy. CE is the hammer energy correction factor.
3. Water level readings have been made at times and under conditions stated. Fluctuations may occur due to other factors than those present at the time measurements were made.

BORING LOG 04.0191154.03 VTRANS BARRE BF 0169(12).GPJ VERMONT AOT.GDT 1/8/21

STATE OF VERMONT
AGENCY OF TRANSPORTATION
CONSTRUCTION AND
MATERIALS BUREAU
CENTRAL LABORATORY

BORING LOG

Bridge No. 21 Replacement Project
Barre Town BF 0169(12)
Barre, Vermont

Boring No.: B-4
Page No.: 1 of 1
Pin No.: 12C576
Checked By: D. Lamothe

Boring Crew: M. D'Ambrosio (NEBC), J. Szmyt (GZA)
Date Started: 12/01/20 Date Finished: 12/01/20
VTSPG NAD83: N 605236.32 ft E 1653751.59 ft
Station: 56+75 Offset: 17 RT
Ground Elevation: 1088.0 ft

	Casing	Sampler
Type:	WASH BORE	SS
I.D.:	4 in	2 in
Hammer Wt:	300 lb.	140 lb.
Hammer Fall:	24 in.	30 in.
Hammer/Rod Type:	Auto/AWJ	
Rig:	Versadrill GT8 TRUCK	CE = 1.3

Groundwater Observations		
Date	Depth (ft)	Notes
12/01/20		Not Encountered

ABUTMENT NO 1
BOTTOM OF FTG.
EL 1076.00

Depth (ft)	Strata (1)	CLASSIFICATION OF MATERIALS (Description)	Blows/6" (N Value)	Moisture Content %	Gravel %	Sand %	Fines %
		Visual Description, Approximately 11 inches of pavement, ASPHALT					
		0.9 ft - 1.0 ft, FILL	9-13-10-9 (23)				
		Visual Description, (Modified Burmister), S-1 (1.0-3.0'): Medium dense, brown, fine to medium SAND, little Silt, trace Gravel (A-1-b). Moist. 33.8 ppm, Rec. = 1.33 ft, FILL					
		Visual Description, (Modified Burmister), S-2 (3.0-5.0'): Medium dense, brown, fine to medium SAND, little Silt, trace Gravel (A-1-b). Moist. 21.5 ppm, Rec. = 0.33 ft, SAND	6-6-5-2 (11)				
5		Visual Description, (Modified Burmister), S-3 (5.0-7.0'): Very loose, brown, fine to medium SAND, trace Silt, trace Gravel (A-3). Moist. 19.5 ppm, Rec. = 0.5 ft, SAND	2-2-1-1 (3)				
		Visual Description, (Modified Burmister), S-4 (7.0-9.0'): Loose, brown, fine to medium SAND, trace Silt, trace Gravel (A-3). Moist. 10.5 ppm, Rec. = 0.58 ft, SAND	2-6-2-4 (8)				
10		Visual Description, (Modified Burmister), S-5 (9.0-11.0'): Loose, brown, fine to medium SAND, little Gravel, trace Silt (A-1-a). Wet. 8.4 ppm, Rec. = 0.5 ft, SAND	2-6-3-5 (9)				
		Hole stopped @ 11.0 ft					
15							
20							
25							
30							

Remarks:
1. Soil samples were screened for total volatile organic compounds (VOCs) using a Tiger photoionization detector with 10.6eV bulb, referenced to an isobutylene-in-air standard. Total VOCs detected are reported in parts per million (ppm). "ND" indicates no VOCs detected above background.
2. VOC grab sample collected from sample S-1. Composite sample obtained from samples S-1 through S-5.

Notes:
1. Stratification lines represent approximate boundary between material types. Transition may be gradual.
2. N Values have not been corrected for hammer energy. CE is the hammer energy correction factor.
3. Water level readings have been made at times and under conditions stated. Fluctuations may occur due to other factors than those present at the time measurements were made.

BORING LOG 04.0191154.03 VTRANS BARRE BF 0169(12).GPJ VERMONT AOT.GDT 1/8/21

McFarland Johnson

PROJECT NAME: BARRE TOWN
PROJECT NUMBER: BF 0169(12)

FILE NAME: zl2c576bor_log.dgn
PROJECT LEADER: D. KULL
DESIGNED BY: S. LISTER
BORING LOGS SHEET NO. 2

PLOT DATE: 1/14/2022
DRAWN BY: S. MERKWAN
CHECKED BY: R. JOY
SHEET 23 OF 50

STATE OF VERMONT
AGENCY OF TRANSPORTATION
CONSTRUCTION AND
MATERIALS BUREAU
CENTRAL LABORATORY

BORING LOG

Bridge No. 21 Replacement Project
Barre Town BF 0169(12)
Barre, Vermont

Boring No.: B-5
Page No.: 1 of 1
Pin No.: 12C576
Checked By: D. Lamothe

Boring Crew: M. D'Ambrosio (NEBC), J. Szmyt (GZA)
Date Started: 12/02/20 Date Finished: 12/02/20
VTSPG NAD83: N 605301.48 ft E 1653793.37 ft
Station: 57+46 Offset: 15 LT
Ground Elevation: 1086.5 ft

	Casing	Sampler
Type:	WASH BORE	SS
I.D.:	4 in	2 in
Hammer Wt:	300 lb.	140 lb.
Hammer Fall:	24 in.	30 in.
Hammer/Rod Type:	Auto/AWJ	
Rig:	Versadrill GT8 TRUCK	CE = 1.3

Groundwater Observations

Date	Depth (ft)	Notes
12/02/20		Not Encountered

Depth (ft)	Strata (1)	CLASSIFICATION OF MATERIALS (Description)	Blows/6" (N Value)	Moisture Content %	Gravel %	Sand %	Fines %
		Visual Description, Approximately 11 inches of pavement, ASPHALT					
		0.9 ft – 1.0 ft, FILL	8-18-14-11 (32)				
		Visual Description, (Modified Burmister), S-1 (1.0-3.0'): Dense, gray-brown, fine to medium SAND, trace Gravel, trace Silt (A-3). Moist. ND, Rec. = 1.08 ft, FILL					
		Visual Description, (Modified Burmister), S-2 (3.0-5.0'): Medium dense, gray-brown, fine to medium SAND, trace Gravel, trace Silt (A-3). Moist. ND, Rec. = 0.67 ft, FILL	7-7-10-10 (17)				
5		Visual Description, (Modified Burmister), S-3 (5.0-7.0'): Medium dense, gray, fine to medium SAND, little Gravel, trace Silt (A-1-a). Moist. ND, Rec. = 0.42 ft, FILL	7-6-7-10 (13)				
		Visual Description, (Modified Burmister), S-4 (7.0-9.0'): Very dense, gray-brown, fine to medium SAND, little Gravel, little Silt (A-1-b). Moist. ND, Rec. = 1.25 ft, FILL	21-18-33-9 (51)				
ABUTMENT NO 2 BOTTOM OF FTG. EL 1076.00 10		Visual Description, (Modified Burmister), S-5 (9.0-11.0'): Medium dense, gray-brown, fine to medium SAND, little Gravel, trace Silt (A-1-a). Moist. ND, Rec. = 1.08 ft, FILL	9-11-9-10 (20)				
		Hole stopped @ 11.0 ft					
15		Remarks: 1. Soil samples were screened for total volatile organic compounds (VOCs) using a Tiger photoionization detector with 10.6eV bulb, referenced to an isobutylene-in-air standard. Total VOCs detected are reported in parts per million (ppm). "ND" indicates no VOCs detected above background.					
20							
25							
30							

Notes:
1. Stratification lines represent approximate boundary between material types. Transition may be gradual.
2. N Values have not been corrected for hammer energy. CE is the hammer energy correction factor.
3. Water level readings have been made at times and under conditions stated. Fluctuations may occur due to other factors than those present at the time measurements were made.

BORING LOG 04.0191154.03 VTRANS BARRE BF 0169(12).GPJ VERMONT AOT.GDT 1/8/21

STATE OF VERMONT
AGENCY OF TRANSPORTATION
CONSTRUCTION AND
MATERIALS BUREAU
CENTRAL LABORATORY

BORING LOG

Bridge No. 21 Replacement Project
Barre Town BF 0169(12)
Barre, Vermont

Boring No.: B-6
Page No.: 1 of 1
Pin No.: 12C576
Checked By: D. Lamothe

Boring Crew: M. D'Ambrosio (NEBC), J. Szmyt (GZA)
Date Started: 12/02/20 Date Finished: 12/02/20
VTSPG NAD83: N 605298.83 ft E 1653789.13 ft
Station: 57+41 Offset: 15 LT
Ground Elevation: 1086.0 ft

	Casing	Sampler
Type:	WASH BORE	SS
I.D.:	4 in	2 in
Hammer Wt:	300 lb.	140 lb.
Hammer Fall:	24 in.	30 in.
Hammer/Rod Type:	Auto/AWJ	
Rig:	Versadrill GT8 TRUCK	CE = 1.3

Groundwater Observations

Date	Depth (ft)	Notes
12/02/20	9.2	Stab. time = 0.25 hrs.

Depth (ft)	Strata (1)	CLASSIFICATION OF MATERIALS (Description)	Run (Dip deg.)	Core Rec. % (RQD %)	Drill Rate minutes/ft	Blows/6" (N Value)	Moisture Content %	Gravel %	Sand %	Fines %
		Visual Description, Approximately 11 inches of pavement, ASPHALT								
		Visual Description, FILL				14-19-14-12 (33)				
		Visual Description, (Modified Burmister), S-1 (1.0-3.0'): Dense, gray-brown, fine to medium SAND, trace Silt, trace Gravel (A-3). Moist. ND, Rec. = 1.25 ft, FILL				10-9-9-8 (18)	7.3	16.1	74.7	9.2
		Visual Description, (Modified Burmister), S-2 (3.0-5.0'): Medium dense, brown, fine to medium SAND, trace Silt, trace Gravel (A-3). Moist. ND, Rec. = 1.08 ft, FILL								
5		Visual Description, (Modified Burmister), S-3 (5.0-7.0'): Medium dense, brown, fine to medium SAND, little Gravel, trace Silt (A-1-a). Moist. ND, Rec. = 0.67 ft, FILL				8-11-8-6 (19)				
		Visual Description, (Modified Burmister), S-4 (7.0-9.0'): Medium dense, brown, fine to medium SAND, some Gravel, trace Silt (A-1-a). Wet. 9.3 ppm, Rec. = 0.5 ft, FILL				6-7-6-9 (13)				
ABUTMENT NO 2 BOTTOM OF FTG. EL 1076.00 10		Visual Description, (Modified Burmister), S-5 (9.0-11.0'): Medium dense, brown, GRAVEL and fine to medium Sand, little Silt (A-1-b). Wet. ND, Rec. = 0.42 ft, FILL				2-6-8-12 (14)	8.6	53.7	31.3	15.0
		Visual Description, (Modified Burmister), S-6 (11.0-13.0'): Medium dense, brown, fine to medium SAND, little Silt, trace Gravel (A-1-b). Wet. ND, Rec. = 0.42 ft, SAND				5-7-9-5 (16)				
		Visual Description, (Modified Burmister), S-7 (13.0-14.1'): Very dense, brown, fine to medium SAND, little Gravel, little Silt (A-1-b). Wet. ND, Rec. = 0.58 ft, SAND				21-29-50/1" (REF)				
15		Visual Description, SAND				50/1" (REF)				
		Visual Description, (Modified Burmister), S-8 (15.0-15.1'): Very dense, olive-brown, fine to medium SAND and Gravel, little Silt (A-1-b). Wet. ND, Rec. = 0.08 ft, SAND	C-1	84 (72)	2.5					
		Advanced roller bit into bedrock and began coring, 15.1 ft – 15.8 ft			3					
		15.8 ft – 20.8 ft, C-1: Hard, fresh, gray, black and white, fine to medium grained, GRANODIORITE. Joints are horizontal to low angle, very closely spaced to widely spaced, rough, undulating, fresh, and partially open.			4.5 4.5 4					
20		20.8 ft – 25.8 ft, C-2: Hard, fresh, gray, black and white, fine to medium grained, GRANODIORITE. Joints are horizontal to low angle, very closely spaced to widely spaced, rough, undulating, fresh, and partially open.	C-2	91 (88)	6 5 4.5 5 5.5					
25		Hole stopped @ 25.8 ft								
30		Remarks: 1. Soil samples were screened for total volatile organic compounds (VOCs) using a Tiger photoionization detector with 10.6eV bulb, referenced to an isobutylene-in-air standard. Total VOCs detected are reported in parts per million (ppm). "ND" indicates no VOCs detected above background. 2. Borehole grouted within rock core runs and backfilled with drill cuttings for remainder of borehole. 3. Bedrock testing completed on C-1 (15.9-16.7 ft.) sample, UCS = 13.7 ksi, unit weight = 164.5 pcf.								

Notes:
1. Stratification lines represent approximate boundary between material types. Transition may be gradual.
2. N Values have not been corrected for hammer energy. CE is the hammer energy correction factor.
3. Water level readings have been made at times and under conditions stated. Fluctuations may occur due to other factors than those present at the time measurements were made.

BORING LOG 04.0191154.03 VTRANS BARRE BF 0169(12).GPJ VERMONT AOT.GDT 1/8/21

McFarland Johnson

PROJECT NAME: BARRE TOWN
PROJECT NUMBER: BF 0169(12)

FILE NAME: z12c576bor_log.dgn
PROJECT LEADER: D. KULL
DESIGNED BY: S. LISTER
BORING LOGS SHEET NO. 3

PLOT DATE: 1/14/2022
DRAWN BY: S. MERKWAN
CHECKED BY: R. JOY
SHEET 24 OF 50

STATE OF VERMONT
AGENCY OF TRANSPORTATION
CONSTRUCTION AND
MATERIALS BUREAU
CENTRAL LABORATORY

BORING LOG

Bridge No. 21 Replacement Project
Barre Town BF 0169(12)
Barre, Vermont

Boring No.: B-7
Page No.: 1 of 1
Pin No.: 12C576
Checked By: D. Lamothe

Boring Crew: M. D'Ambrosio (NEBC), J. Szmyt (GZA)
Date Started: 12/03/20 Date Finished: 12/03/20
VTSPG NAD83: N 605275.37 ft E 1653811.88 ft
Station: 57+48 Offset: 16 RT
Ground Elevation: 1086.5 ft

	Casing	Sampler
Type:	WASH BORE	SS
I.D.:	4 in	2 in
Hammer Wt:	300 lb.	140 lb.
Hammer Fall:	24 in.	30 in.

Hammer/Rod Type: Auto/AWJ
Rig: Versadrill GT8 TRUCK CE = 1.3

Groundwater Observations		
Date	Depth (ft)	Notes
12/03/20		Not Encountered

Depth (ft)	Strata (1)	CLASSIFICATION OF MATERIALS (Description)	Blows/6" (N Value)	Moisture Content %	Gravel %	Sand %	Fines %
		Visual Description, Approximately 11 inches of pavement, ASPHALT					
		0.9 ft – 1.0 ft, FILL	12-16-10-13 (26)				
		Visual Description, (Modified Burmister), S-1 (1.0-3.0'): Medium dense, brown, fine to medium SAND, little Gravel, trace Silt (A-1-a). Moist. ND, Rec. = 1.17 ft, FILL					
		Visual Description, (Modified Burmister), S-2 (3.0-5.0'): Loose, brown, fine to medium SAND, trace Gravel, trace Silt (A-3). Moist. ND, Rec. = 0.92 ft, FILL	6-4-5-5 (9)				
5		Visual Description, (Modified Burmister), S-3 (5.0-7.0'): Loose, brown, fine to medium SAND, little Gravel, trace Silt (A-1-a). Moist. ND, Rec. = 0.58 ft, FILL	7-5-4-10 (9)				
		Visual Description, (Modified Burmister), S-4 (7.0-9.0'): Medium dense, brown, fine to medium SAND, little Gravel, trace Silt (A-1-a). Moist. ND, Rec. = 1.08 ft, FILL	7-5-20-4 (25)				
10		Visual Description, (Modified Burmister), S-5 (9.0-11.0'): Medium dense, brown, fine to medium SAND, little Gravel, trace Silt (A-1-a). Moist. ND, Rec. = 1.25 ft, FILL	2-12-12-6 (24)				
		Hole stopped @ 11.0 ft					
15							
20							
25							
30							

ABUTMENT NO 2
BOTTOM OF FTG.
EL 1076.00

Remarks:
1. Soil samples were screened for total volatile organic compounds (VOCs) using a Tiger photoionization detector with 10.6eV bulb, referenced to an isobutylene-in-air standard. Total VOCs detected are reported in parts per million (ppm). "ND" indicates no VOCs detected above background.

Notes:
1. Stratification lines represent approximate boundary between material types. Transition may be gradual.
2. N Values have not been corrected for hammer energy. CE is the hammer energy correction factor.
3. Water level readings have been made at times and under conditions stated. Fluctuations may occur due to other factors than those present at the time measurements were made.

BORING LOG 04.0191154.03 VTRANS BARRE BF 0169(12).GPJ VERMONT AOT.GDT 1/8/21

STATE OF VERMONT
AGENCY OF TRANSPORTATION
CONSTRUCTION AND
MATERIALS BUREAU
CENTRAL LABORATORY

BORING LOG

Bridge No. 21 Replacement Project
Barre Town BF 0169(12)
Barre, Vermont

Boring No.: B-8
Page No.: 1 of 1
Pin No.: 12C576
Checked By: D. Lamothe

Boring Crew: M. D'Ambrosio (NEBC), J. Szmyt (GZA)
Date Started: 12/03/20 Date Finished: 12/03/20
VTSPG NAD83: N 605272.27 ft E 1653808.23 ft
Station: 57+43 Offset: 17 RT
Ground Elevation: 1086.0 ft

	Casing	Sampler
Type:	WASH BORE	SS
I.D.:	4 in	2 in
Hammer Wt:	300 lb.	140 lb.
Hammer Fall:	24 in.	30 in.

Hammer/Rod Type: Auto/AWJ
Rig: Versadrill GT8 TRUCK CE = 1.3

Groundwater Observations		
Date	Depth (ft)	Notes
12/03/20	13.2	Stab. time = 0.25 hrs.

Depth (ft)	Strata (1)	CLASSIFICATION OF MATERIALS (Description)	Blows/6" (N Value)	Moisture Content %	Gravel %	Sand %	Fines %
		Visual Description, Approximately 11 inches of pavement, ASPHALT					
		0.9 ft – 1.0 ft, FILL	14-16-7-5 (23)	4.5	23.9	63.5	12.6
		Visual Description, (Modified Burmister), S-1 (1.0-3.0'): Medium dense, brown, fine to coarse SAND, little Gravel, little Silt (A-1-b). Moist. ND, Rec. = 1.08 ft, FILL					
		Visual Description, (Modified Burmister), S-2 (3.0-5.0'): Loose, brown, fine to medium SAND, trace Gravel, trace Silt (A-3). Moist. ND, Rec. = 0.75 ft, FILL	5-4-4-3 (8)				
5		Visual Description, (Modified Burmister), S-3 (5.0-7.0'): Loose, gray, fine to medium SAND, little Gravel, trace Silt (A-1-a). Moist. ND, Rec. = 0.75 ft, FILL	3-4-5-14 (9)				
		Visual Description, (Modified Burmister), S-4 (7.0-8.4'): Very dense, olive-brown, fine to coarse SAND and Gravel, little Silt (A-1-b). Moist. ND, Rec. = 0.58 ft, FILL	10-15-50/5" (REF)	5.8	51.0	35.7	13.3
		Advanced roller bit through cobbles, 8.4 ft – 9.5 ft					
10		Visual Description, (Modified Burmister), S-5 (9.5-11.5'): Dense, gray-brown, fine to medium SAND and Gravel, trace Silt (A-1-a). Wet. ND, Rec. = 0.17 ft, SAND	3-4-36-3 (40)				
		Visual Description, (Modified Burmister), S-6 (11.5-11.6'): Very dense, gray, fine to medium SAND and Gravel, trace Silt (A-1-a). Wet. ND, Rec. = 0.08 ft, SAND	50/1" (REF)				
		Advanced roller bit through cobbles, 11.6 ft – 15.0 ft					
15		Advanced roller bit into probable bedrock, 15.0 ft – 17.0 ft					
		Hole stopped @ 17.0 ft					
20							
25							
30							

ABUTMENT NO 2
BOTTOM OF FTG.
EL 1076.00

Remarks:
1. Soil samples were screened for total volatile organic compounds (VOCs) using a Tiger photoionization detector with 10.6eV bulb, referenced to an isobutylene-in-air standard. Total VOCs detected are reported in parts per million (ppm). "ND" indicates no VOCs detected above background.

Notes:
1. Stratification lines represent approximate boundary between material types. Transition may be gradual.
2. N Values have not been corrected for hammer energy. CE is the hammer energy correction factor.
3. Water level readings have been made at times and under conditions stated. Fluctuations may occur due to other factors than those present at the time measurements were made.

BORING LOG 04.0191154.03 VTRANS BARRE BF 0169(12).GPJ VERMONT AOT.GDT 1/8/21

McFarland Johnson

PROJECT NAME: BARRE TOWN
PROJECT NUMBER: BF 0169(12)

FILE NAME: z12c576bor_log.dgn
PROJECT LEADER: D. KULL
DESIGNED BY: S. LISTER
BORING LOGS SHEET NO. 4

PLOT DATE: 1/14/2022
DRAWN BY: S. MERKWAN
CHECKED BY: R. JOY
SHEET 25 OF 50

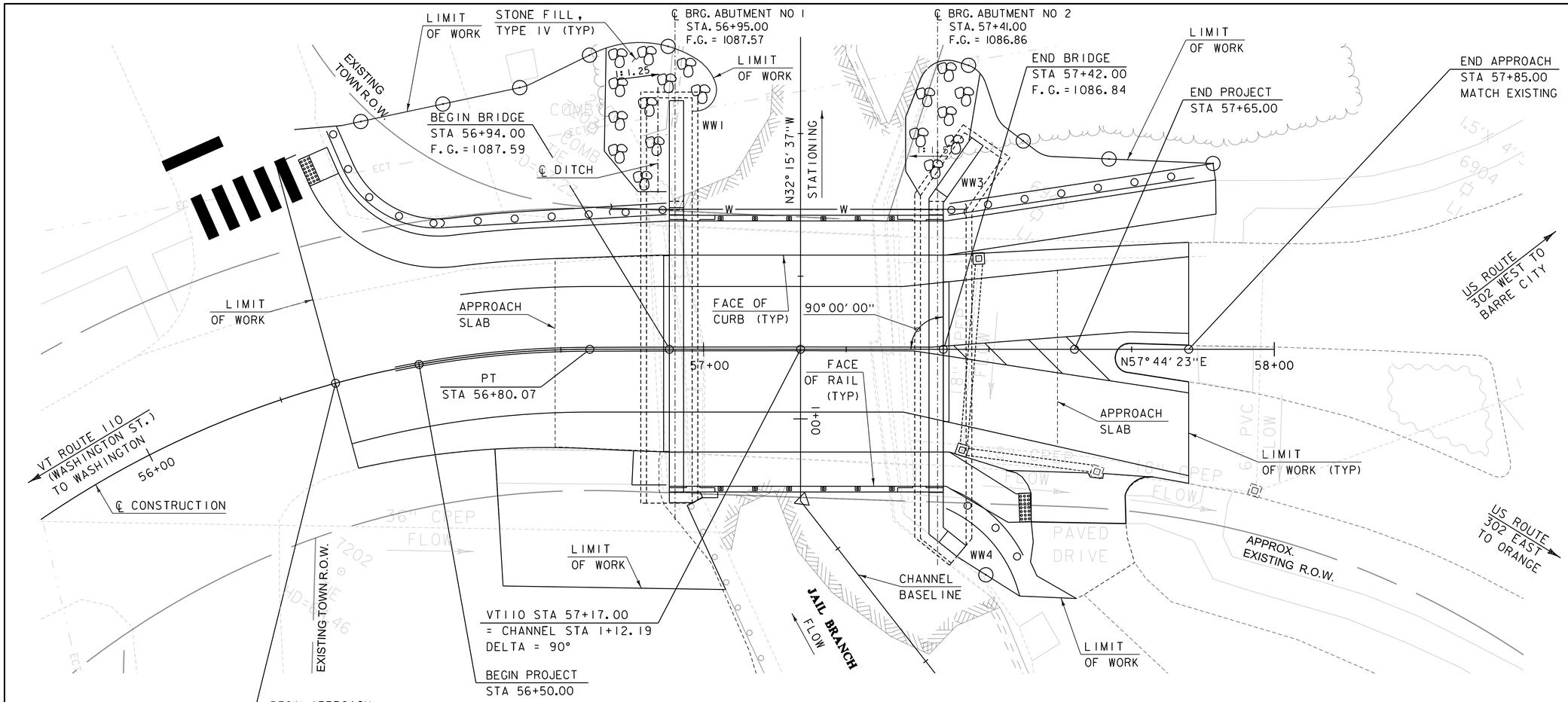

PLAN

SCALE 1" = 10'-0"

10 0 10

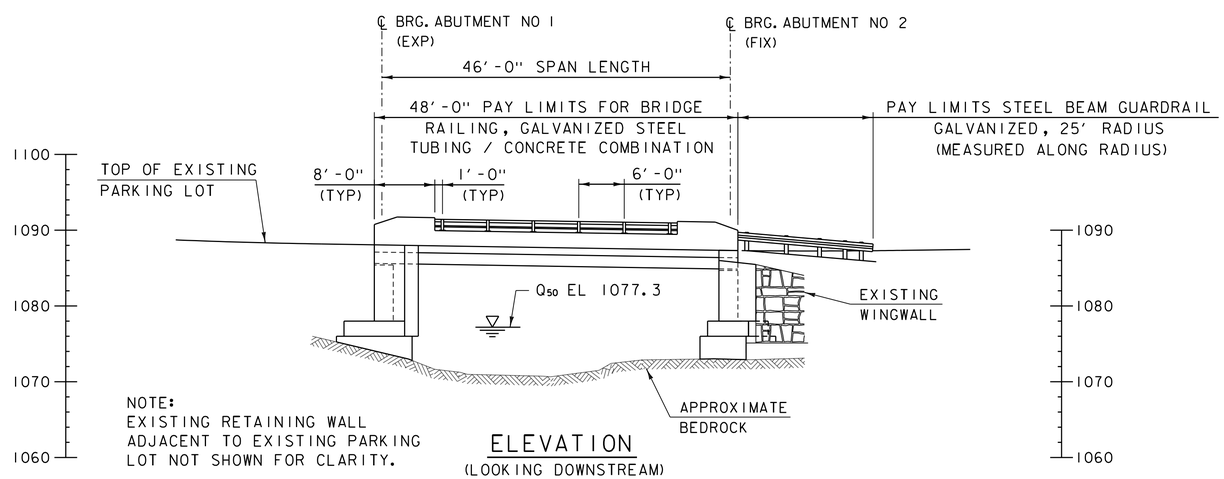

NOTE:
EXISTING RETAINING WALL ADJACENT TO EXISTING PARKING LOT NOT SHOWN FOR CLARITY.

ELEVATION

(LOOKING DOWNSTREAM)

SCALE 1" = 10'-0"

10 0 10

McFarland Johnson

PROJECT NAME: BARRE TOWN	
PROJECT NUMBER: BF 0169(12)	
FILE NAME: z12c576pe.dgn	PLOT DATE: 1/14/2022
PROJECT LEADER: D. KULL	DRAWN BY: S. MERKWAN
DESIGNED BY: C. GAGNE	CHECKED BY: D. KULL
PLAN AND ELEVATION SHEET	SHEET 26 OF 50

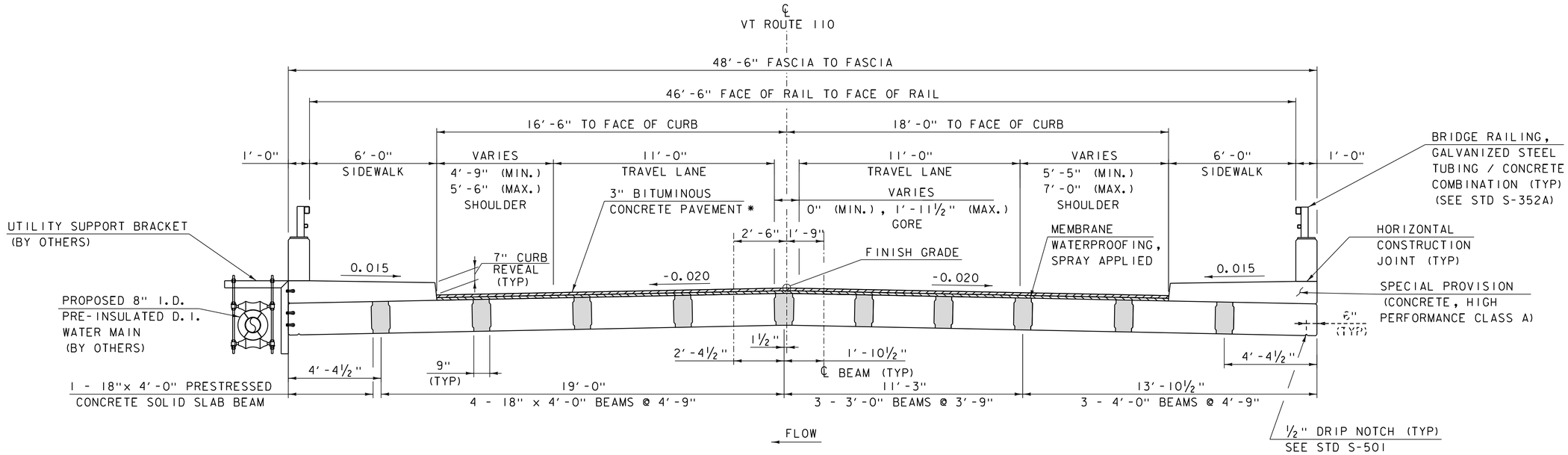

TYPICAL BRIDGE SECTION

SCALE: ⅜" = 1'-0"

NOTE: TRAVEL WAY DIMENSIONING IS MEASURED PERPENDICULAR TO THE ALIGNMENT.

* 1½" SPECIAL PROVISION (BITUMINOUS CONCRETE PAVEMENT, SMALL QUANTITY) TYPE IVB OVER
1½" SPECIAL PROVISION (BITUMINOUS CONCRETE PAVEMENT, SMALL QUANTITY) TYPE IVB

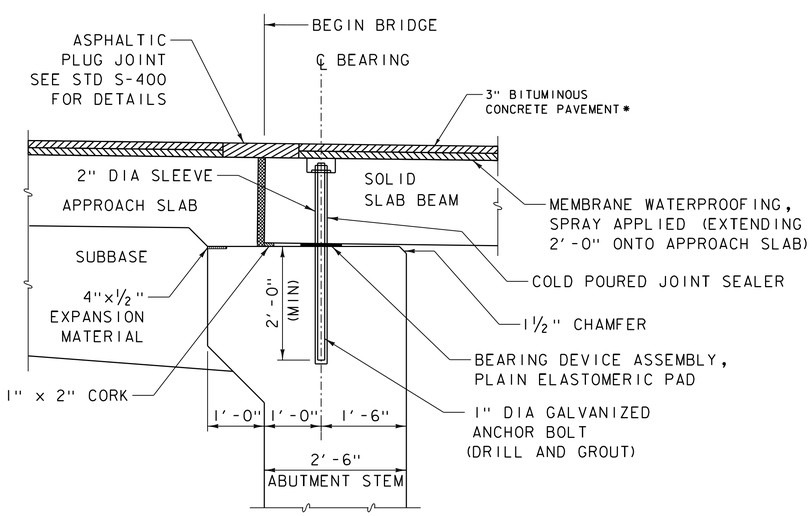

ABUMENT #1 BRIDGE BRIDGE END DETAIL

NOTE REINFORCING NOT SHOWN FOR CLARITY

SCALE: ¾" = 1'-0"

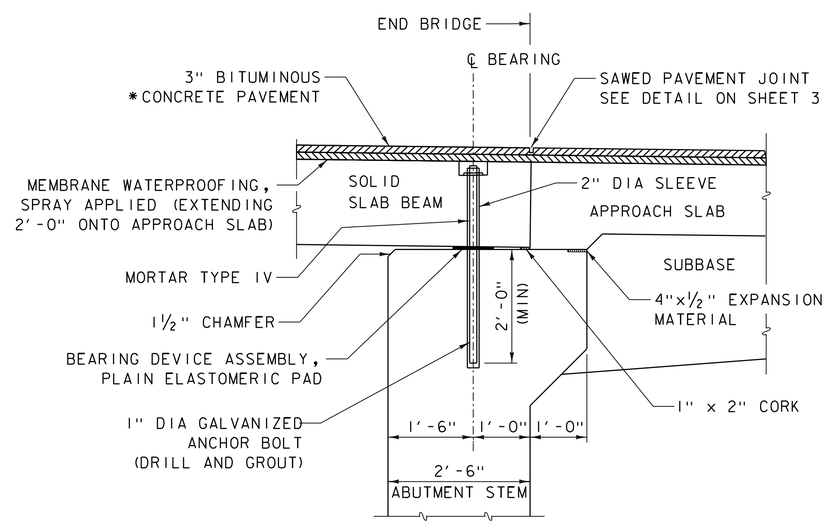

ABUMENT #2 BRIDGE BRIDGE END DETAIL

NOTE REINFORCING NOT SHOWN FOR CLARITY

SCALE: ¾" = 1'-0"

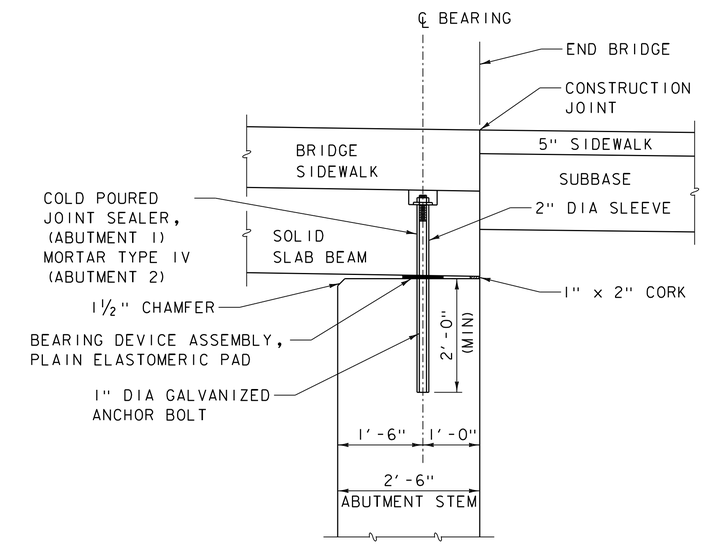

BRIDGE SEAT TYPICAL SECTION (AT SIDEWALK)

(ABUTMENT NO. 2 SHOWN, ABUTMENT NO. 1 SIMILAR)

SCALE: ¾" = 1'-0"

LEGEND

- SPECIAL PROVISION (BITUMINOUS CONCRETE PAVEMENT, SMALL QUANTITY)
- SPECIAL PROVISION (HIGH PERFORMANCE CONCRETE, RAPID SET)

McFarland Johnson

PROJECT NAME: BARRE TOWN	
PROJECT NUMBER: BF 0169(12)	
FILE NAME: z12c576sup_typ.dgn	PLOT DATE: 1/14/2022
PROJECT LEADER: D. KULL	DRAWN BY: S. MERKWAN
DESIGNED BY: D. WHITE	CHECKED BY: R. JOY
TYPICAL BRIDGE SECTION AND DETAILS SHEET	SHEET 27 OF 50

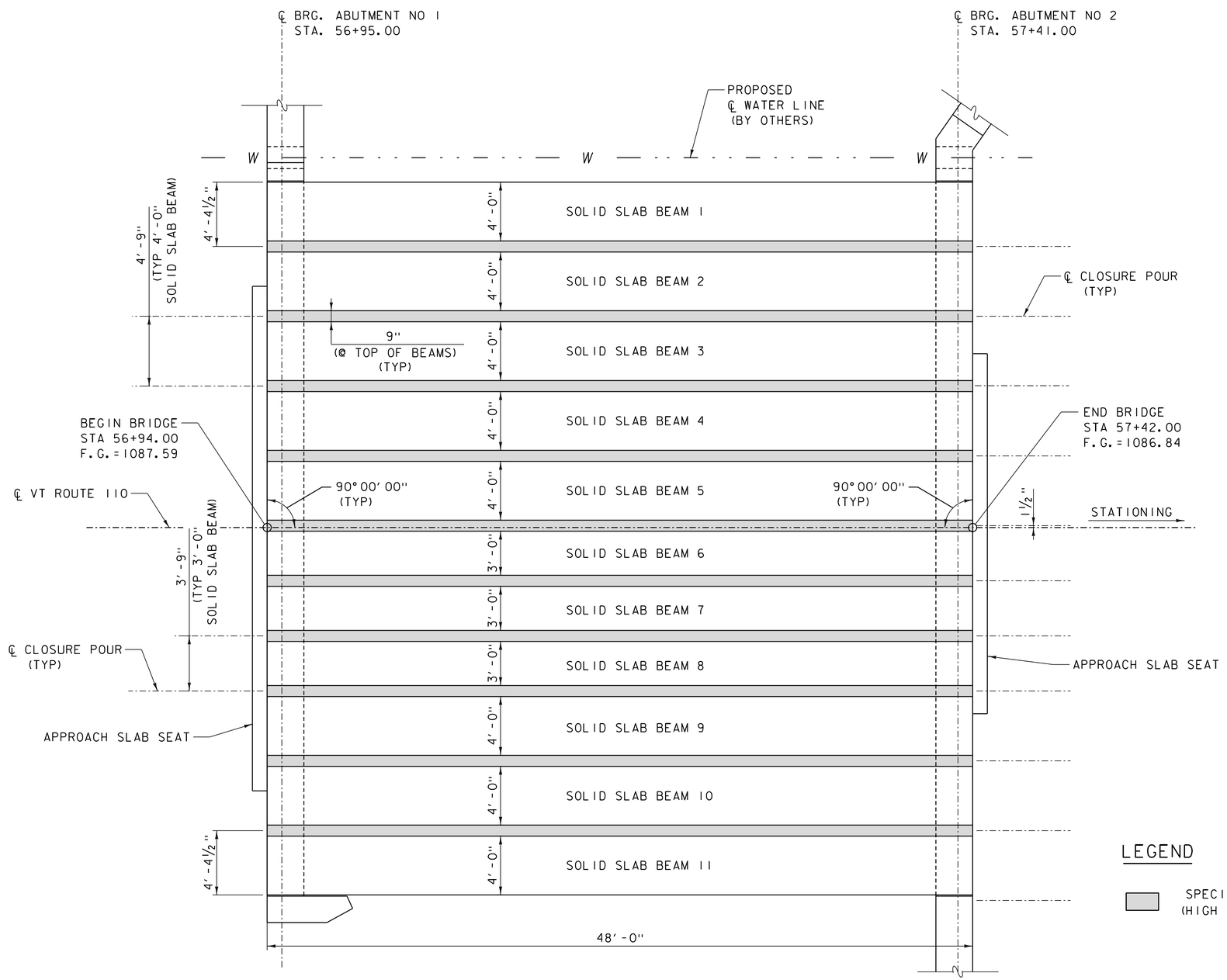

DECK PLAN

SCALE: ¼" = 1'-0"

NOTE: BITUMINOUS CONCRETE PAVEMENT AND SIDEWALKS NOT SHOWN FOR CLARITY

LEGEND

SPECIAL PROVISION
(HIGH PERFORMANCE CONCRETE, RAPID SET)

McFarland Johnson

PROJECT NAME: BARRE TOWN	
PROJECT NUMBER: BF 0169(12)	
FILE NAME: zl2c576sup.dgn	PLOT DATE: 1/14/2022
PROJECT LEADER: D. KULL	DRAWN BY: S. MERKWAN
DESIGNED BY: C. GAGNE	CHECKED BY: R. JOY
SOLID SLAB DECK PLAN	SHEET 28 OF 50

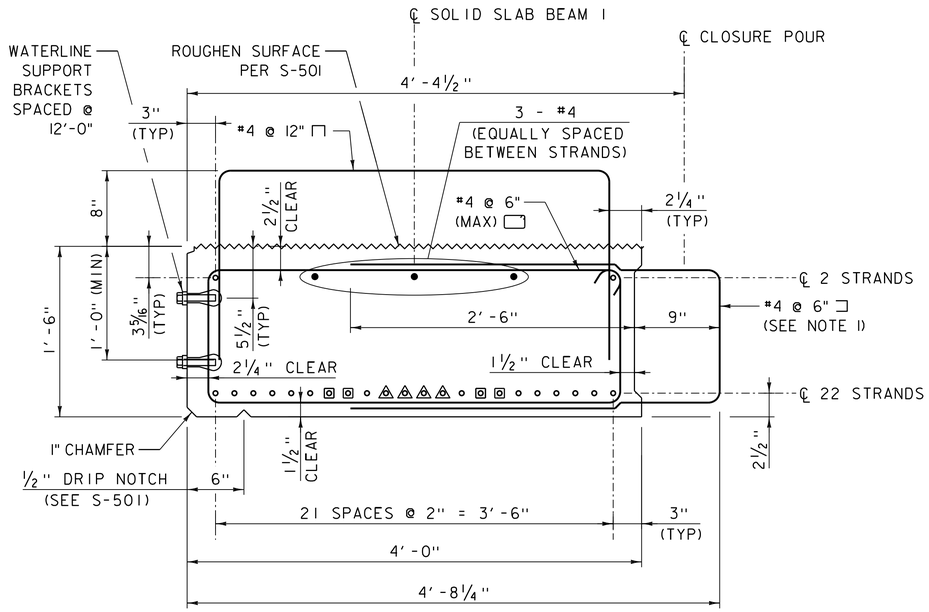

SOLID SLAB BEAM 1

SCALE: 1½" = 1'-0"

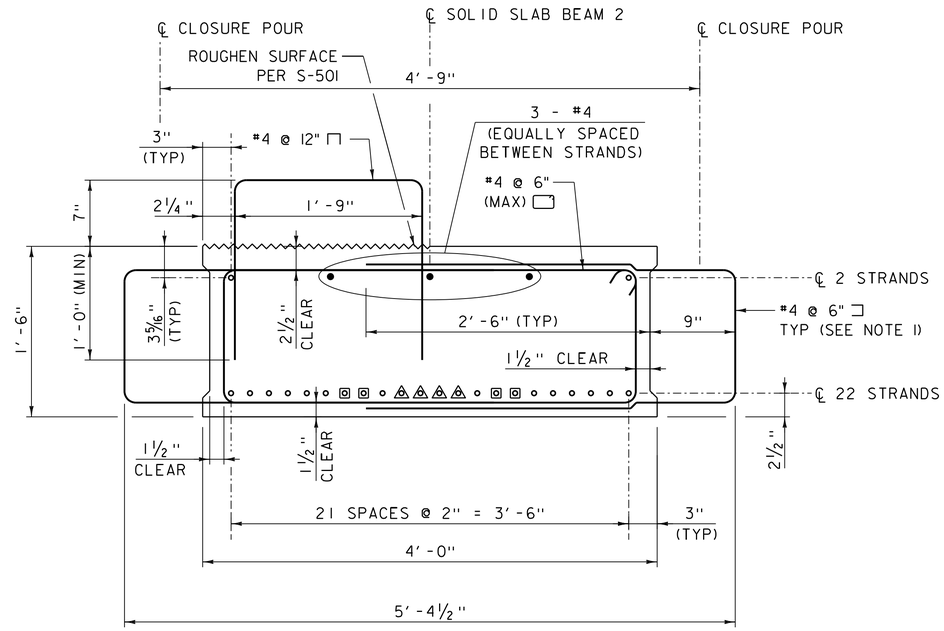

SOLID SLAB BEAM 2

SCALE: 1½" = 1'-0"

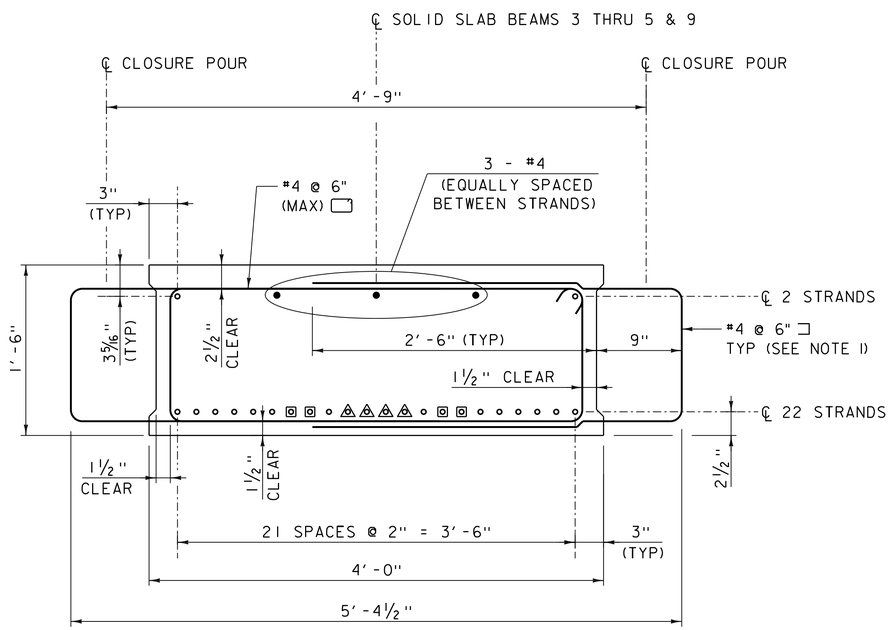

SOLID SLAB BEAMS 3 THRU 5 & 9

SCALE: 1½" = 1'-0"

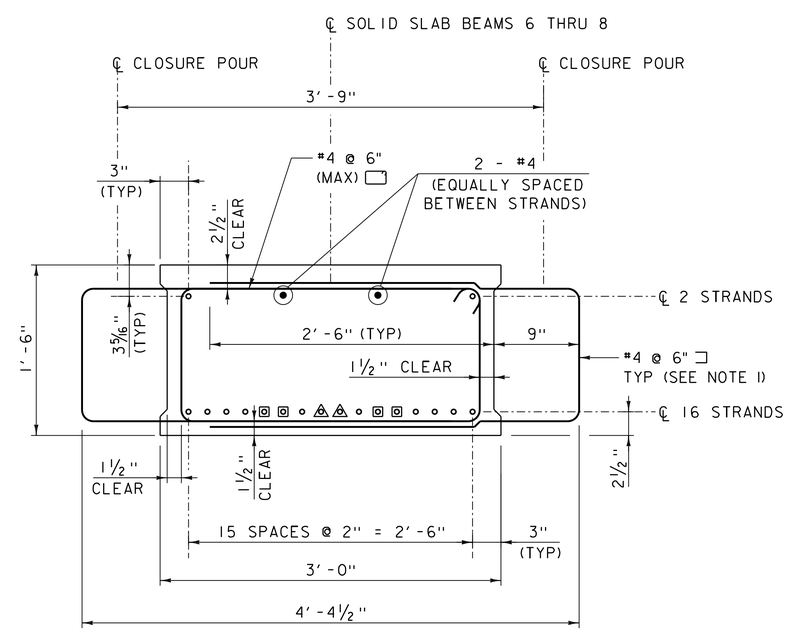

SOLID SLAB BEAMS 6 THRU 8

SCALE: 1½" = 1'-0"

NOTES:

1. STAGGER BARS BETWEEN ADJACENT SOLID SLAB BEAMS TO PROVIDE 3" SPACING BETWEEN BARS. SEE CLOSURE POUR PLAN.

LEGEND

- ∘ 0.6" PRESTRESSING STRAND
- □ DEBONDED 6'-0" EACH BEAM END
- △ DEBONDED 9'-0" EACH BEAM END
- ● LEVEL II REINFORCING STEEL
- ▭ SPECIAL PROVISION (HIGH PERFORMANCE CONCRETE, RAPID SET)

McFarland Johnson

PROJECT NAME: BARRE TOWN	
PROJECT NUMBER: BF 0169(12)	
FILE NAME: zl2c576sup_detls.dgn	PLOT DATE: 1/14/2022
PROJECT LEADER: D. KULL	DRAWN BY: S. MERKWAN
DESIGNED BY: C. GAGNE	CHECKED BY: R. JOY
SOLID SLAB BEAM DETAILS 1	SHEET 29 OF 50

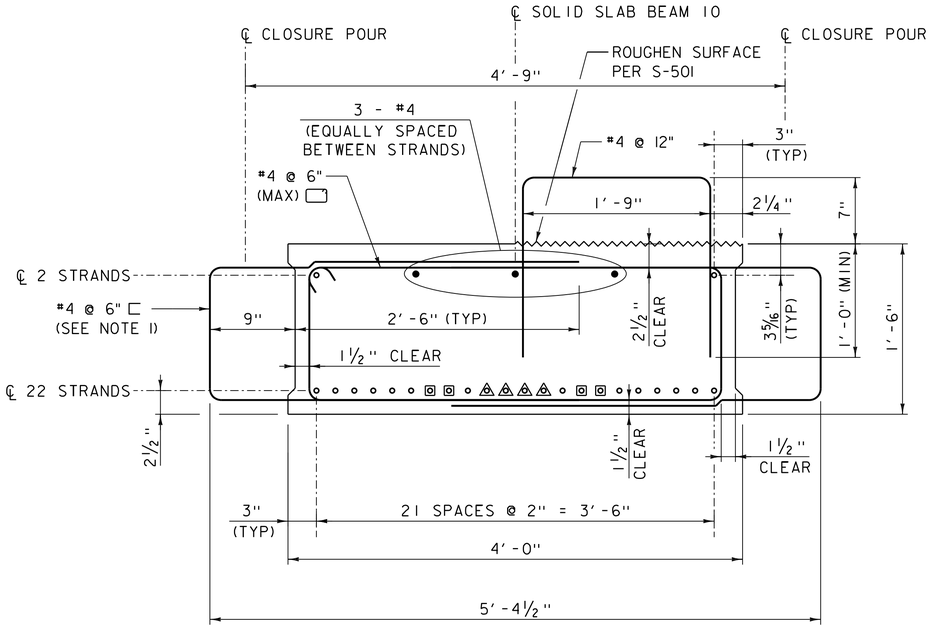

SOLID SLAB BEAM 10

SCALE: 1½" = 1' -0"

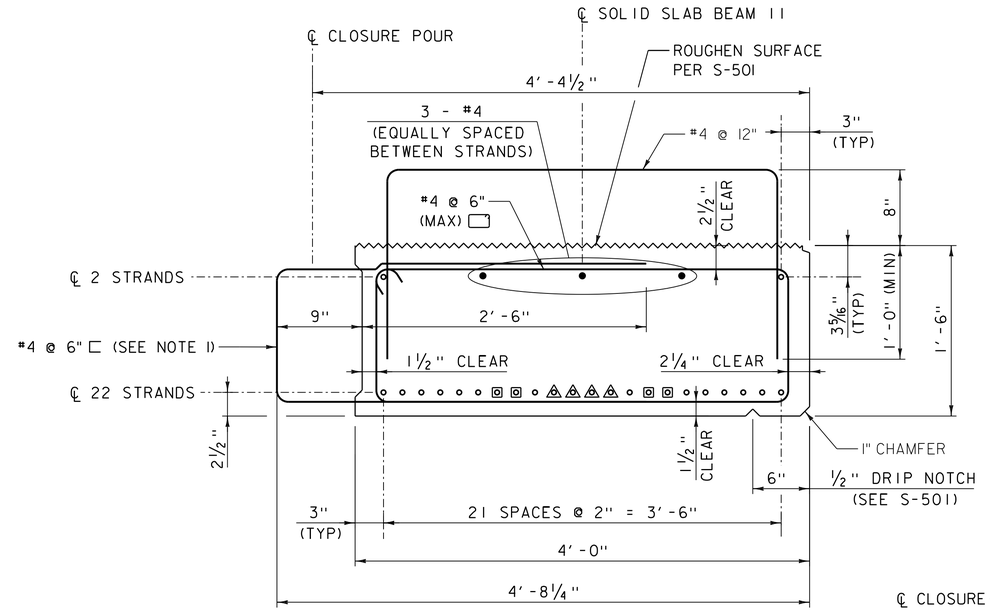

SOLID SLAB BEAM 11

SCALE: 1½" = 1' -0"

LEGEND

- ∘ 0.6" PRESTRESSING STRAND
- □ DEBONDED 6' -0" EACH BEAM END
- △ DEBONDED 9' -0" EACH BEAM END
- ● LEVEL 11 REINFORCING STEEL
- SPECIAL PROVISION (HIGH PERFORMANCE CONCRETE, RAPID SET

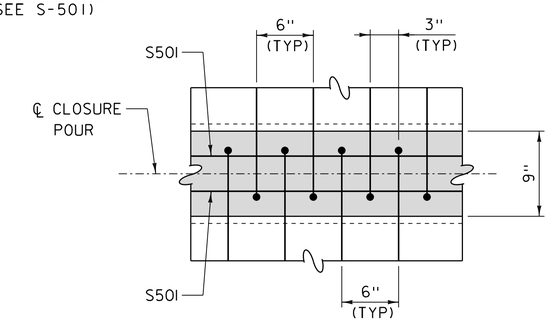

CLOSURE POUR PLAN

SCALE: 1½" = 1' -0"

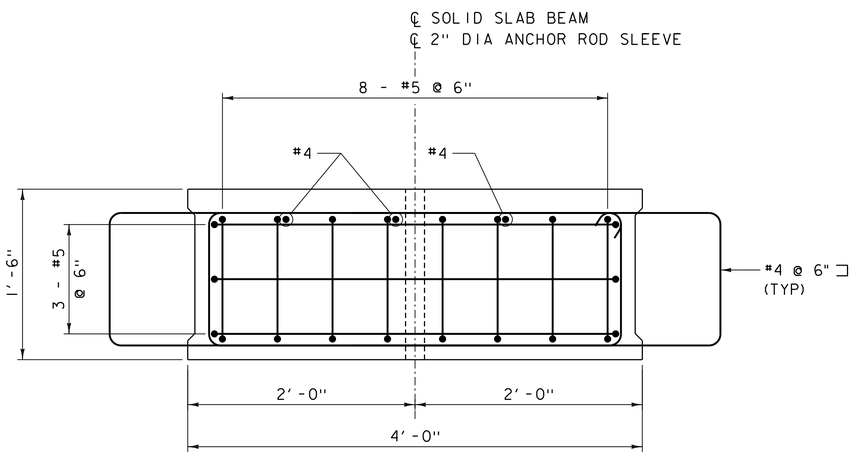

4' -0" SOLID SLAB END BEAM ELEVATION

SCALE: 1½" = 1' -0"

(PRESTRESSING STRANDS NOT SHOWN FOR CLARITY)

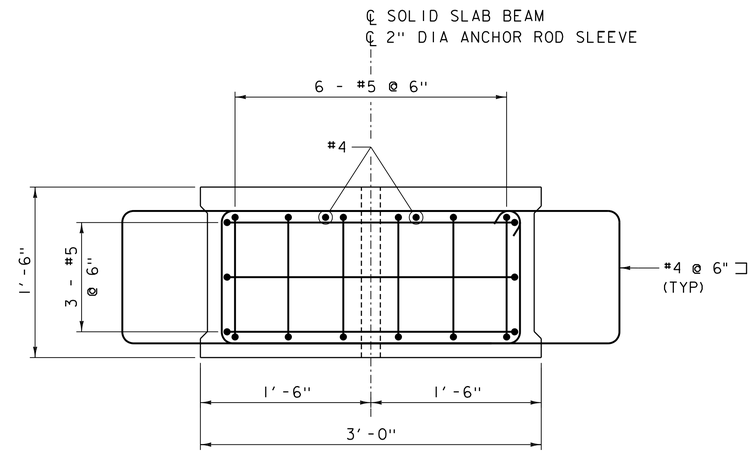

3' -0" SOLID SLAB END BEAM ELEVATION

SCALE: 1½" = 1' -0"

(PRESTRESSING STRANDS NOT SHOWN FOR CLARITY)

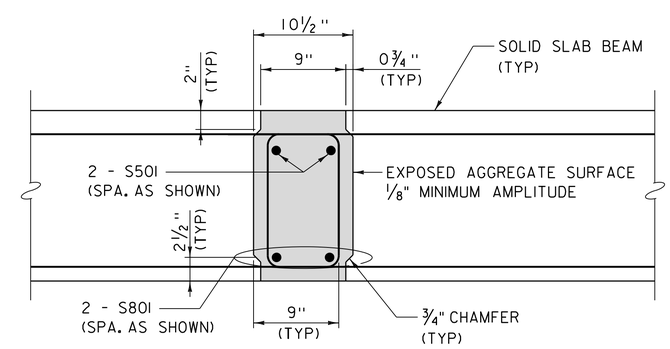

CLOSURE POUR SECTION

SCALE: 1½" = 1' -0"

NOTES:

1. STAGGER BARS BETWEEN ADJACENT SOLID SLAB BEAMS TO PROVIDE 3" SPACING BETWEEN BARS. SEE CLOSURE POUR PLAN.

McFarland Johnson

PROJECT NAME: BARRE TOWN	
PROJECT NUMBER: BF 0169(12)	
FILE NAME: zl2c576sup_detls.dgn	PLOT DATE: 1/14/2022
PROJECT LEADER: D. KULL	DRAWN BY: S. MERKWAN
DESIGNED BY: C. GAGNE	CHECKED BY: R. JOY
SOLID SLAB BEAM DETAILS 2	SHEET 30 OF 50

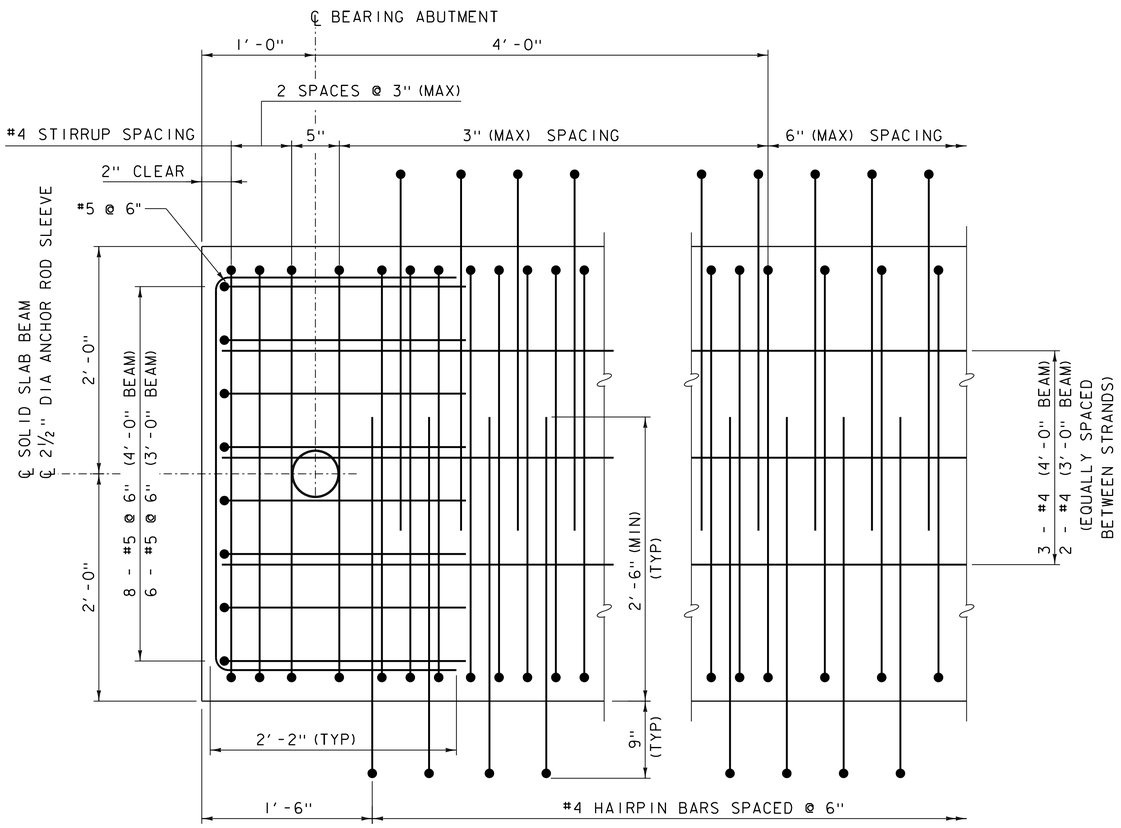

TYPICAL BEAM END LAYOUT

(4'-0" BEAM SHOWN, 3'-0" BEAM SIMILAR)
(PRESTRESSING STRANDS NOT SHOWN FOR CLARITY)
SCALE: 1½" = 1'-0"

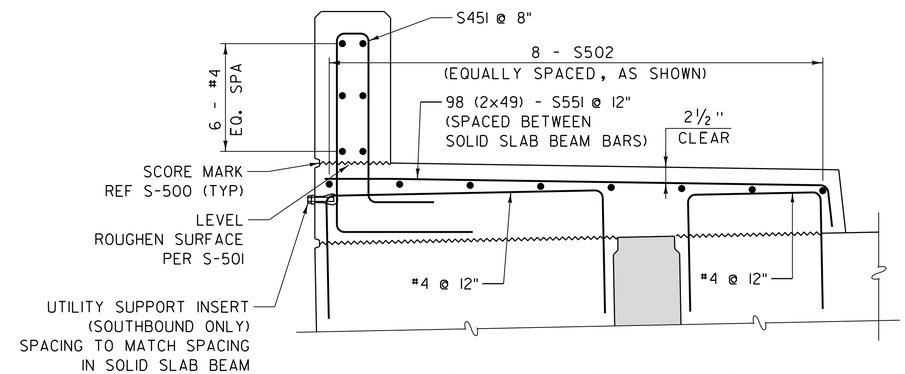

SIDEWALK REINFORCING

(SOUTHBOUND SIDEWALK SHOWN, NORTHBOUND SIDEWALK SIMILAR)
SCALE: 1" = 1'-0"

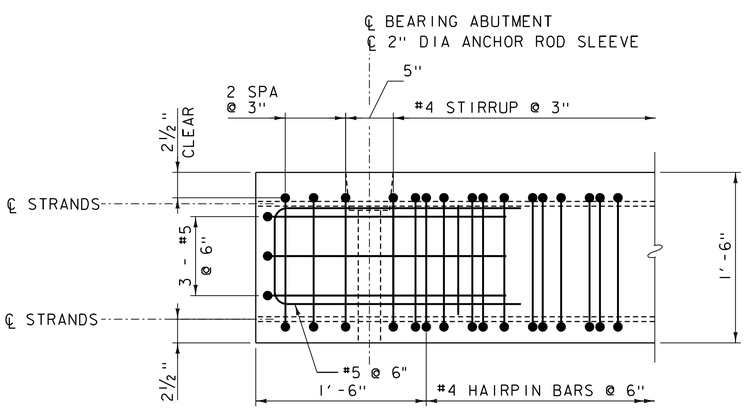

TYPICAL BEAM END SIDE ELEVATION

SCALE: 1½" = 1'-0"

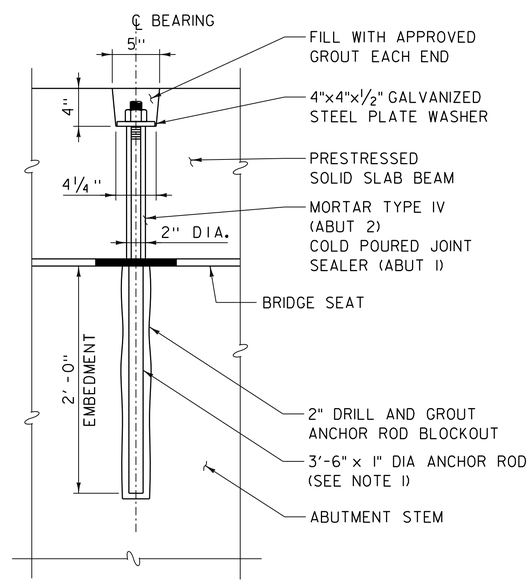

PRESTRESSED BEAM ANCHOR DETAIL

NOT TO SCALE

NOTES:

1. ANCHOR RODS SHALL BE ASTM F1554 GRADE 105, GALVANIZED AND SHALL MEET THE REQUIREMENTS OF SUBSECTION 714.08.
2. ANCHOR RODS, INCLUDING ALL MATERIALS, LABOR AND INCIDENTALS SHALL BE INCIDENTAL TO THE UNIT BID PRICE FOR PRESTRESSED CONCRETE SOLID SLABS.
3. DRILL AND GROUTING FOR ANCHOR RODS SHALL BE INCIDENTAL TO ITEM 900.608 SPECIAL PROVISION (CONCRETE, HIGH PERFORMANCE CLASS PCS).

McFarland Johnson

PROJECT NAME: BARRE TOWN	
PROJECT NUMBER: BF 0169(12)	
FILE NAME: zl2c576sup_detls.dgn	PLOT DATE: 1/14/2022
PROJECT LEADER: D. KULL	DRAWN BY: S. MERKWAN
DESIGNED BY: C. GAGNE	CHECKED BY: R. JOY
SOLID SLAB BEAM DETAILS 3	SHEET 31 OF 50

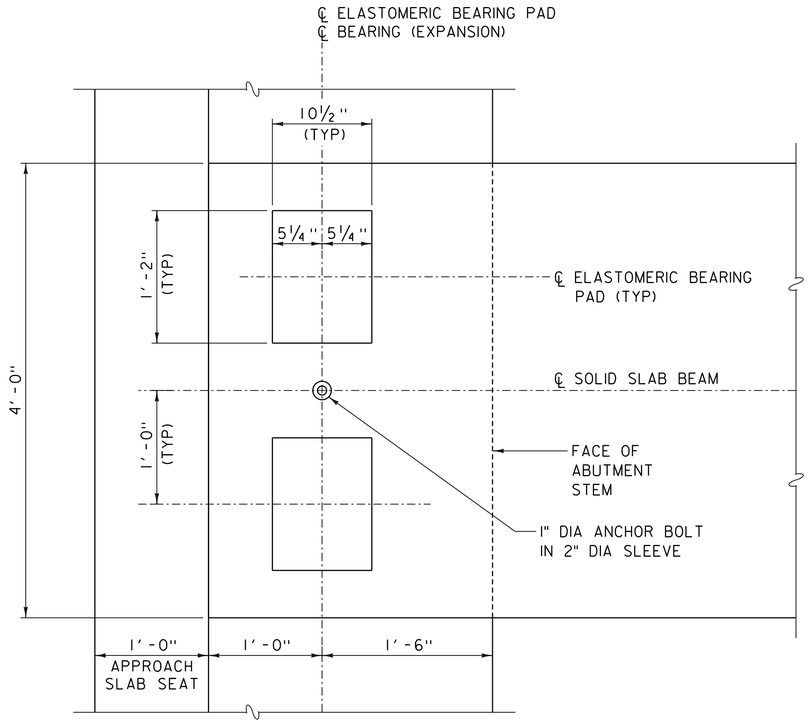

BEARING DETAILS (4'-0" BEAM)

SCALE: 1½" = 1'-0"

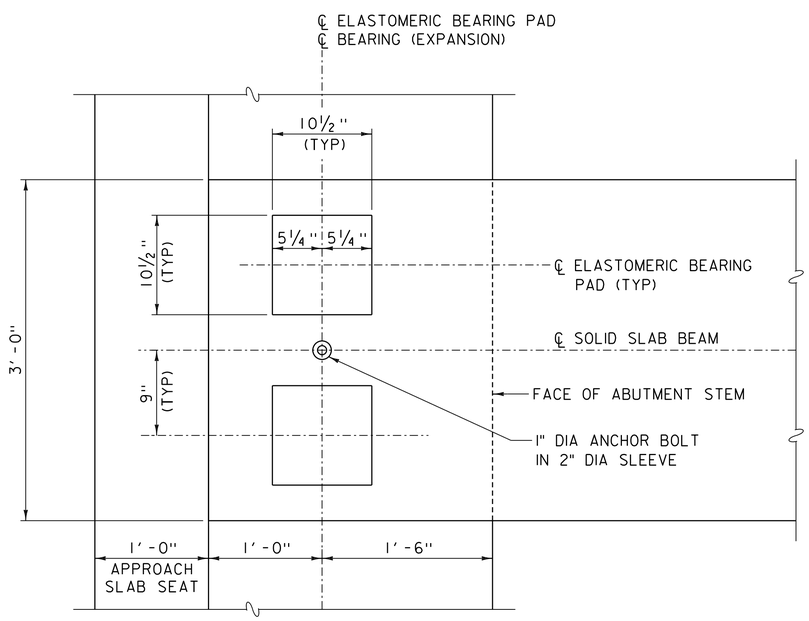

BEARING DETAILS (3'-0" BEAM)

SCALE: 1½" = 1'-0"

BEARING NOTES:

1. ITEM 531.16, "BEARING DEVICE ASSEMBLY, PLAIN ELASTOMERIC PAD" IS THE PAY ITEMS FOR THE BEARINGS. BEARINGS SHALL CONFORM TO THE APPLIC SECTIONS 531 AND 731.
2. ALTERNATE CONFIGURATIONS FOR ELASTOMERIC BEARINGS MAY BE SUBMITTED FOR APPROVAL. ANY ALTERNATE BEARING SUBMITTED SHALL BE DESIGNED AND CERTIFIED TO MEET THE LOADS AND CRITERIA SHOWN ON THIS SHEET. THE BEARINGS SHALL BE DESIGNED ACCORDING TO AASHTO "LRFD BRIDGE DESIGN SPECIFICATIONS 8th EDITION".
3. THE ELASTOMER SHALL HAVE A HARDNESS OF 50 USING A SHORE A DUROMETER.
4. DESIGN CRITERIA FOR 4'-0" SOLID SLAB BEAM (10½"x1'-2") PADS (AASHTO METHOD A)
   - A) SHEAR MODULUS: 95 PSI TO 130 PSI
   - B) TEMPERATURE RANGE: 80°F
   - C) MAXIMUM BEARING STRESS: 285 PSI
   - D) MAXIMUM UNFACTORED GIRDER REACTIONS:
     - DEAD LOAD: 40 KIPS
     - LIVE LOAD: 35 KIPS (WITH IMPACT)
   - E) DESIGN LONGITUDINAL MOVEMENT: 0.15 IN
5. DESIGN CRITERIA FOR 3'-0" SOLID SLAB BEAM (10½"x10½") PADS (AASHTO METHOD A)
   - F) SHEAR MODULUS: 95 PSI TO 130 PSI
   - G) TEMPERATURE RANGE: 80°F
   - H) MAXIMUM BEARING STRESS: 249 PSI
   - I) MAXIMUM UNFACTORED GIRDER REACTIONS:
     - DEAD LOAD: 28 KIPS
     - LIVE LOAD: 25 KIPS (WITH IMPACT)
   - J) DESIGN LONGITUDINAL MOVEMENT: 0.15 IN
6. CONTRACTOR SHALL SUPPLY A SELF-ADHESIVE COMPRESSIBLE SEALER BETWEEN THE BOTTOM OF THE UNITS AND THE BRIDGE SEAT. THIS COMPRESSIBLE SEALER SHALL SURROUND THE 2½" DIA SLEEVE IN THE UNIT. THE PURPOSE OF THE SEALER IS TO FACILITATE PLACEMENT OF THE GROUT AROUND THE ANCHOR BOLTS.
7. PAYMENT FOR BEAM ANCHORAGE, INCLUDING ALL MATERIALS, LABOR, AND INCIDENTALS WILL BE INCLUDED IN THE UNIT PRICE BID FOR PRESTRESSED CONCRETE SOLID SLABS.
8. A MINIMUM OF 20 1/4" GALVANIZED STEEL SHIMS SHALL BE PROVIDED TO ADJUST FOR FINAL GRADE AND CAMBER TOLERANCES. SHIMS SHALL BE INCIDENTAL TO ITEM 531.16, "BEARING DEVICE ASSEMBLY, PLAIN ELASTOMERIC PAD".

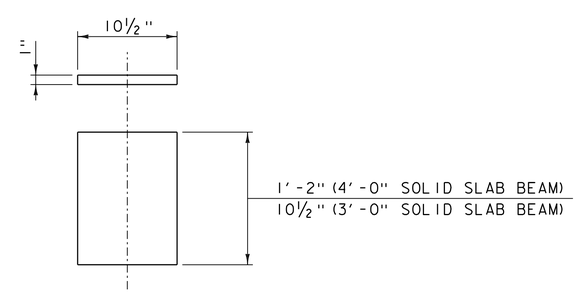

ELASTOMERIC BEARING PAD DETAIL

SCALE: 1½" = 1'-0"

McFarland Johnson

PROJECT NAME: BARRE TOWN	
PROJECT NUMBER: BF 0169(12)	
FILE NAME: zl2c576sup_detls.dgn	PLOT DATE: 1/14/2022
PROJECT LEADER: D. KULL	DRAWN BY: S. MERKWAN
DESIGNED BY: C. GAGNE	CHECKED BY: R. JOY
BEARING DETAILS	SHEET 32 OF 50

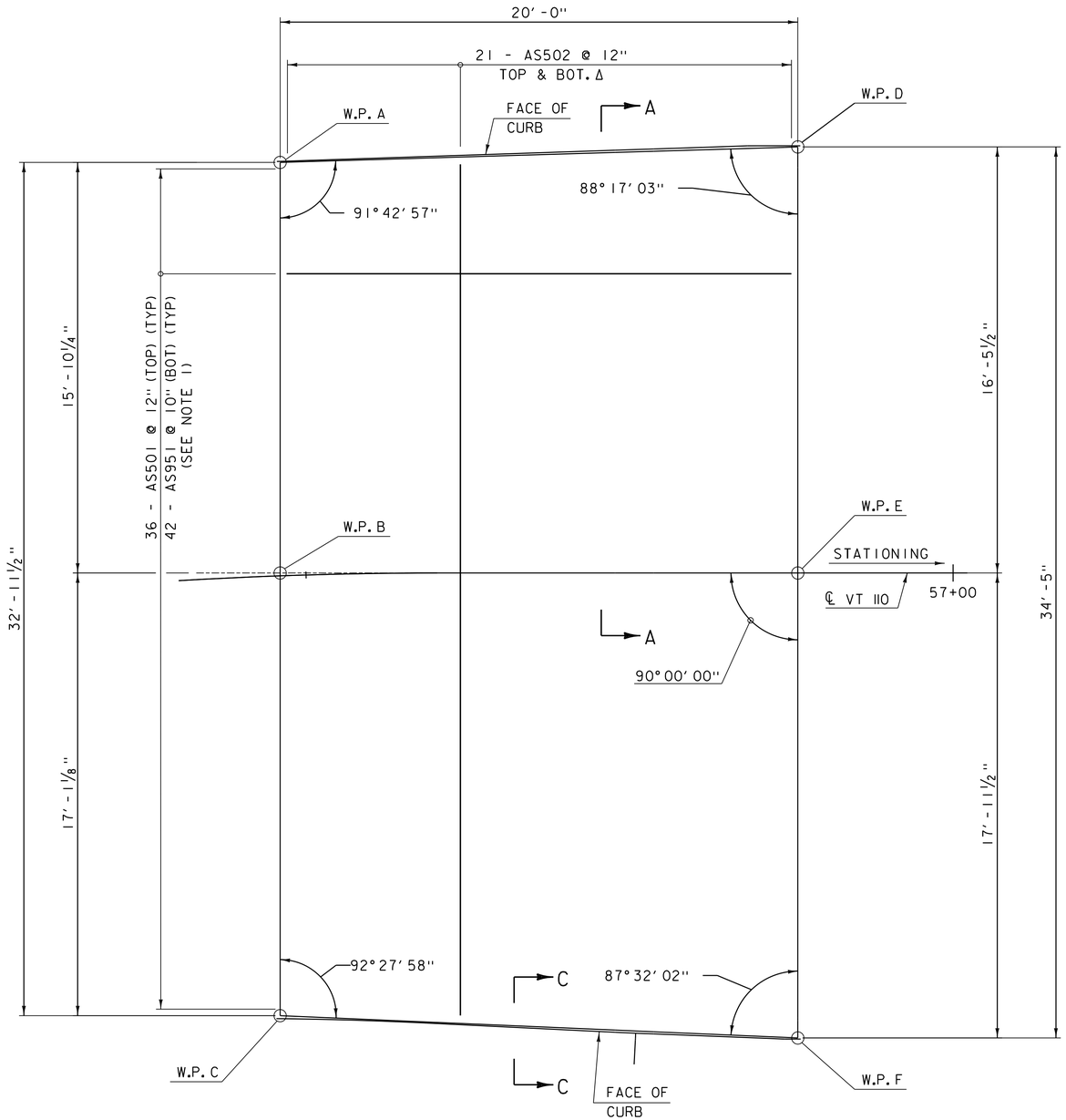

APPROACH SLAB NO. 1 PLAN

SCALE ⅜" = 1'-0"

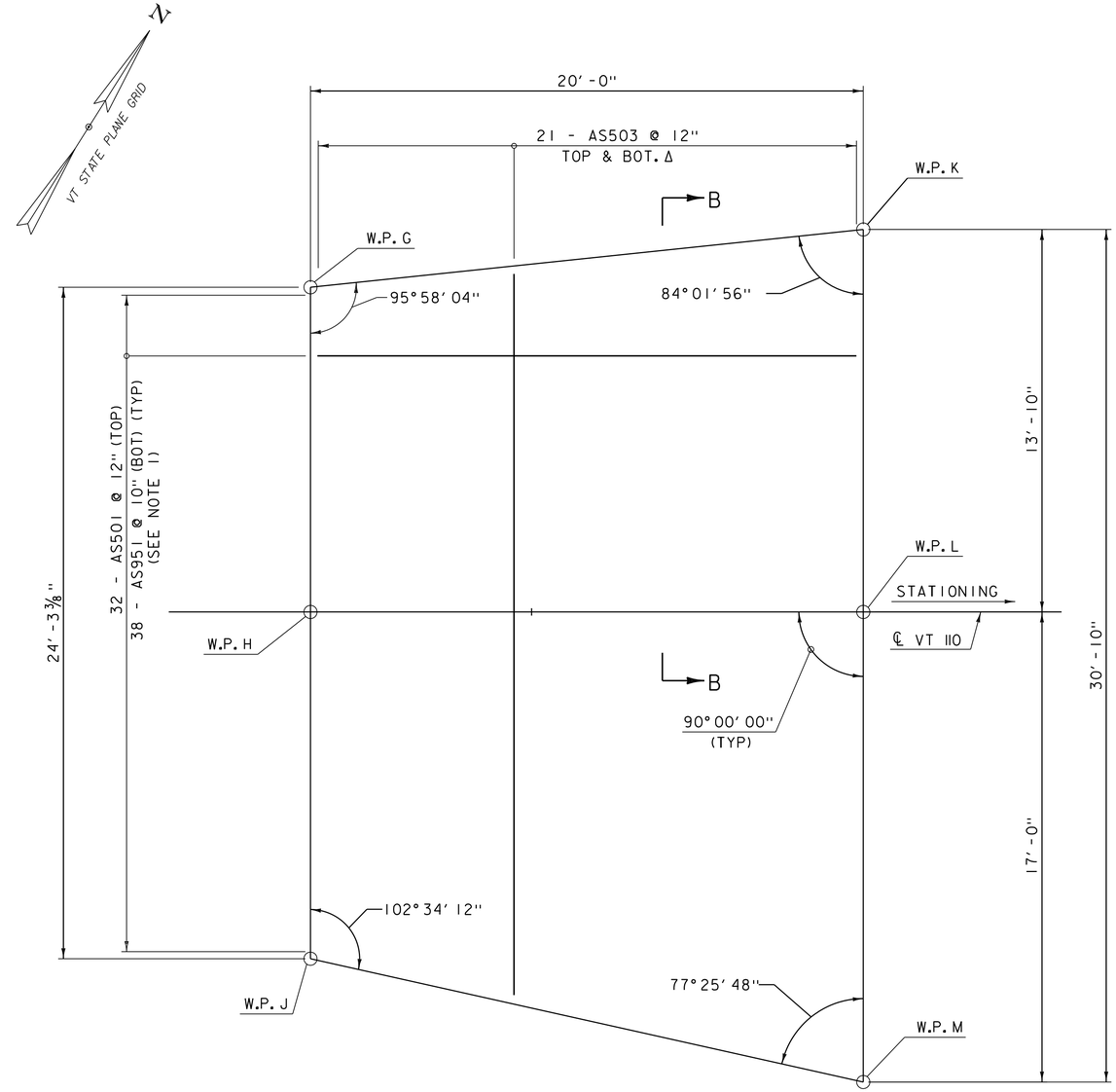

APPROACH SLAB NO. 2 PLAN

SCALE ⅜" = 1'-0"

NOTES

1. BARS TO BE SPLAYED TO MAINTAIN MINIMUM SPACING.

NOTE

NF = NEAR FACE
FF = FAR FACE
EF = EACH FACE
▲ = CUT TO FIT IN FIELD
3" CLEAR, UNLESS OTHERWISE SPECIFIED ON THE PLANS.
2'-5" BAR LAP UNLESS OTHERWISE SPECIFIED ON THE PLANS.

McFarland Johnson

PROJECT NAME: BARRE TOWN	
PROJECT NUMBER: BF 0169(12)	
FILE NAME: zl2c576supapp.dgn	PLOT DATE: 1/14/2022
PROJECT LEADER: D. KULL	DRAWN BY: S. MERKWAN
DESIGNED BY: C. GAGNE	CHECKED BY: R. JOY
APPROACH SLAB DETAILS 1	SHEET 33 OF 50

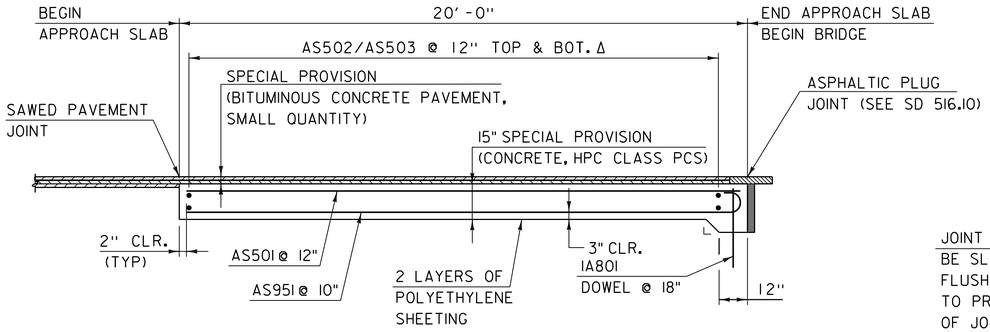

APPROACH SLAB 1 TYPICAL SECTION

SCALE 3/8" = 1'-0"

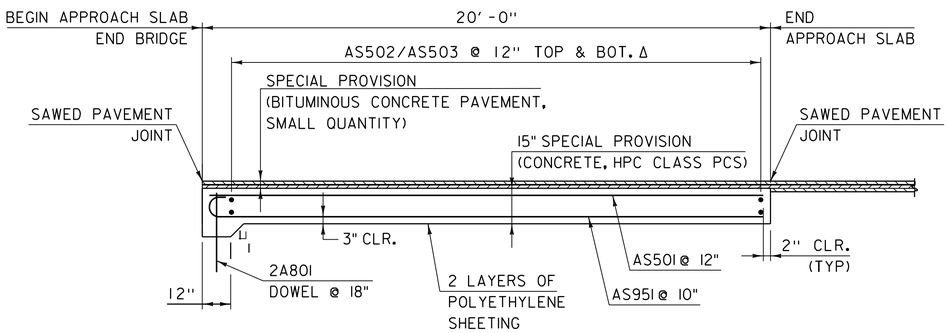

APPROACH SLAB 2 TYPICAL SECTION

SCALE 3/8" = 1'-0"

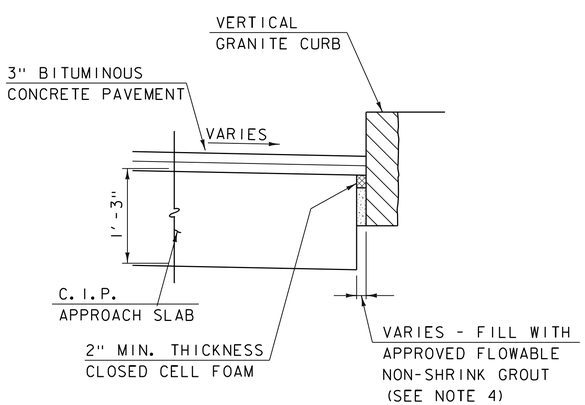

SECTION C-C

SCALE: 1" = 1'-0"

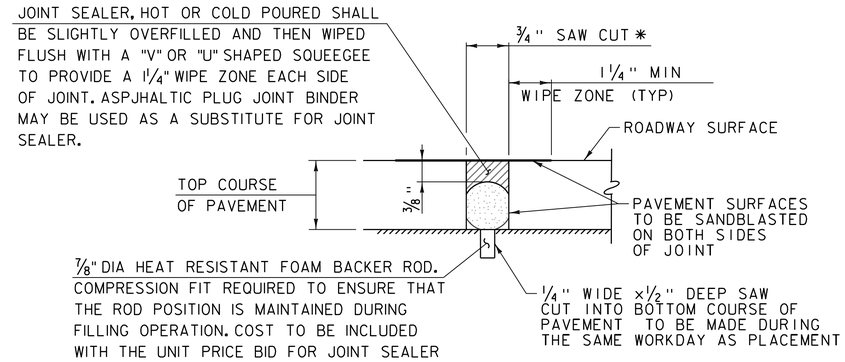

* - JOINT IS TO BE LOCATED ACCURATELY BY STRING LINING OR OTHER MEANS, PRIOR TO PAVING, SO THAT THE SAW CUTS WILL BE MADE DIRECTLY OVER THE END OF THE CONCRETE DECK. JOINT SHALL BE CUT DRY IN A SINGLE PASS AND BE SEALED WITHIN 24 HOURS OR PRIOR TO EXPOSURE TO TRAFFIC. JOINT SHALL BE CLEANED PRIOR TO APPLYING THE JOINT SEALER.

SAWED PAVEMENT JOINT DETAIL

(NOT TO SCALE)

APPROACH SLAB ELEVATIONS

	APPROACH SLAB NO. 1		
W.P.	STATION	OFFSET	ELEVATION
A	56.74.52	15.96' LT	1087.43
B	56+74.01	00.19' LT	1087.76
C	56+73.32	16.98' RT	1087.45
D	56+94.00	16.46' LT	1087.01
E	56+94.00	0.00	1087.34
F	56+94.00	17.96' RT	1086.98

APPROACH SLAB ELEVATIONS

	APPROACH SLAB NO. 2		
W.P.	STATION	OFFSET	ELEVATION
G	57+42.00	11.74' LT	1086.36
H	57+42.00	0.00	1086.59
J	57+42.00	12.54' RT	1086.34
K	57+62.00	13.73' LT	1086.25
L	57+62.00	0.00	1086.60
M	57+62.00	17.00' RT	1086.22

NOTE: ALL ELEVATIONS ARE AT TOP OF SLAB

APPROACH SLAB NOTES

1. COMPACT THE SUBBASE IN THE AREA UNDER THE APPROACH SLAB TO A SMOOTH SURFACE. THE CONTRACTOR SHALL BE RESPONSIBLE FOR ESTABLISHING UNIFORM CONTACT BETWEEN THE APPROACH SLAB AND THE SUBBASE MATERIAL TO THE SATISFACTION OF THE ENGINEER.
2. MATERIAL FOR POLYETHYLENE SHEETING SHALL MEET THE REQUIREMENTS OF SUBSECTION 725.01(c). PLACE THE SHEETING ON TOP OF THE FINISHED SUBBASE FOR THE FULL LENGTH AND WIDTH OF THE APPROACH SLAB, EXCEPT IN THE BRACKET AT THE ABUTMENT. LAP SHEETING AT LEAST 2'-0". PAYMENT FOR SHEETING WILL BE IN THE UNIT BID PRICE FOR THE APPROACH SLAB CONCRETE ITEM.
3. PAYMENT FOR FLOWABLE NON-SHRINK GROUT SHALL BE INCLUDED IN ITEM 616.21, VERTICAL GRANITE CURB.

NOTE

NF = NEAR FACE
FF = FAR FACE
EF = EACH FACE
▲ = CUT TO FIT IN FIELD
3" CLEAR, UNLESS OTHERWISE SPECIFIED ON THE PLANS.
2'-5" BAR LAP UNLESS OTHERWISE SPECIFIED ON THE PLANS.

McFarland Johnson

PROJECT NAME: BARRE TOWN
PROJECT NUMBER: BF 0169(12)

FILE NAME: zl2c576supapp.dgn
PROJECT LEADER: D. KULL
DESIGNED BY: C. GAGNE
APPROACH SLAB DETAILS 2

PLOT DATE: 1/14/2022
DRAWN BY: S. MERKWAN
CHECKED BY: R. JOY
SHEET 34 OF 50

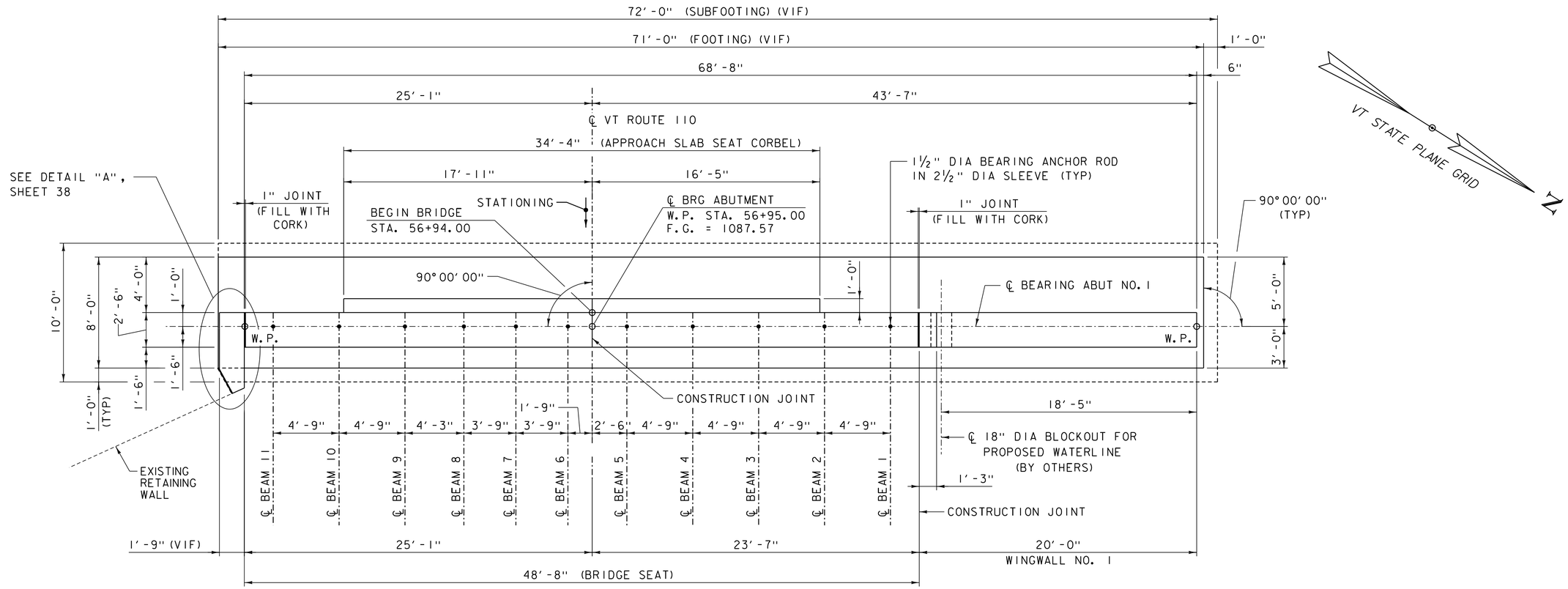

ABUTMENT NO. 1 PLAN

SCALE: ¼" = 1'-0"

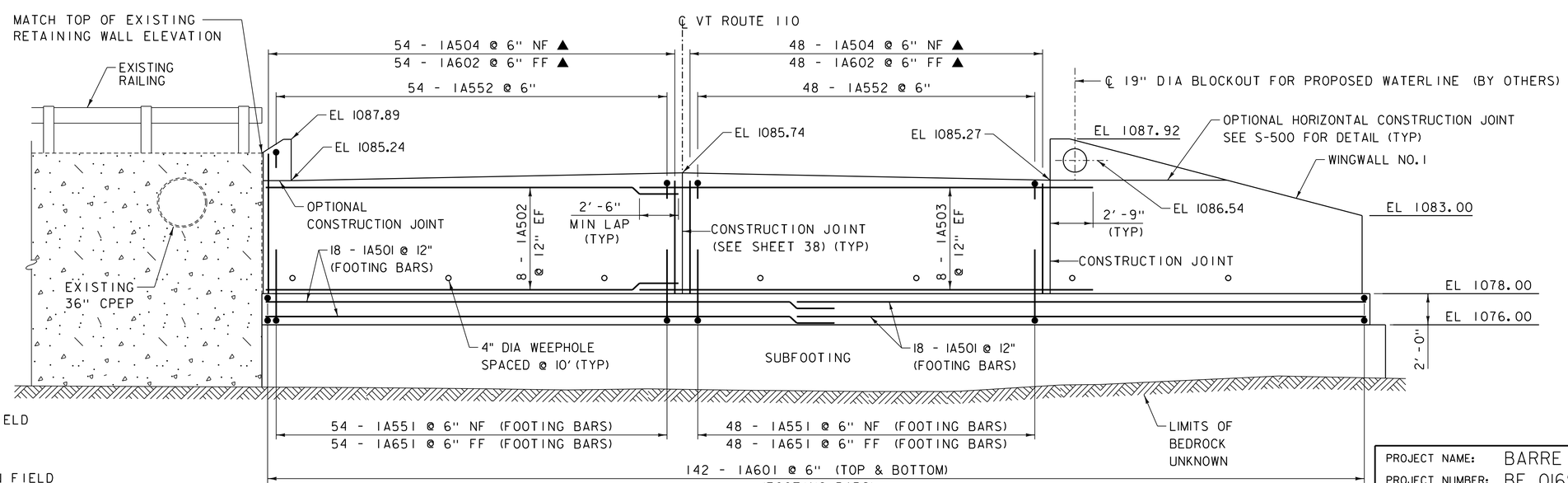

ABUTMENT NO. 1 ELEVATION

SCALE: ¼" = 1'-0"

NOTE: WINGWALL NO. 1 REINFORCING NOT SHOWN FOR CLARITY

NOTE

VIF = VERIFY IN FIELD
NF = NEAR FACE
FF = FAR FACE
EF = EACH FACE
▲ = CUT TO FIT IN FIELD
3" CLEAR, UNLESS OTHERWISE SPECIFIED ON THE PLANS.
2'-6" BAR LAP UNLESS OTHERWISE SPECIFIED ON THE PLANS.

McFarland Johnson

PROJECT NAME: BARRE TOWN	
PROJECT NUMBER: BF 0169(12)	
FILE NAME: zl2c576pln_abut_1.dgn	PLOT DATE: 1/14/2022
PROJECT LEADER: D. KULL	DRAWN BY: S. MERKWAN
DESIGNED BY: T. AGUILAR	CHECKED BY: R. JOY
ABUTMENT NO. 1 PLAN & ELEVATION	SHEET 35 OF 50

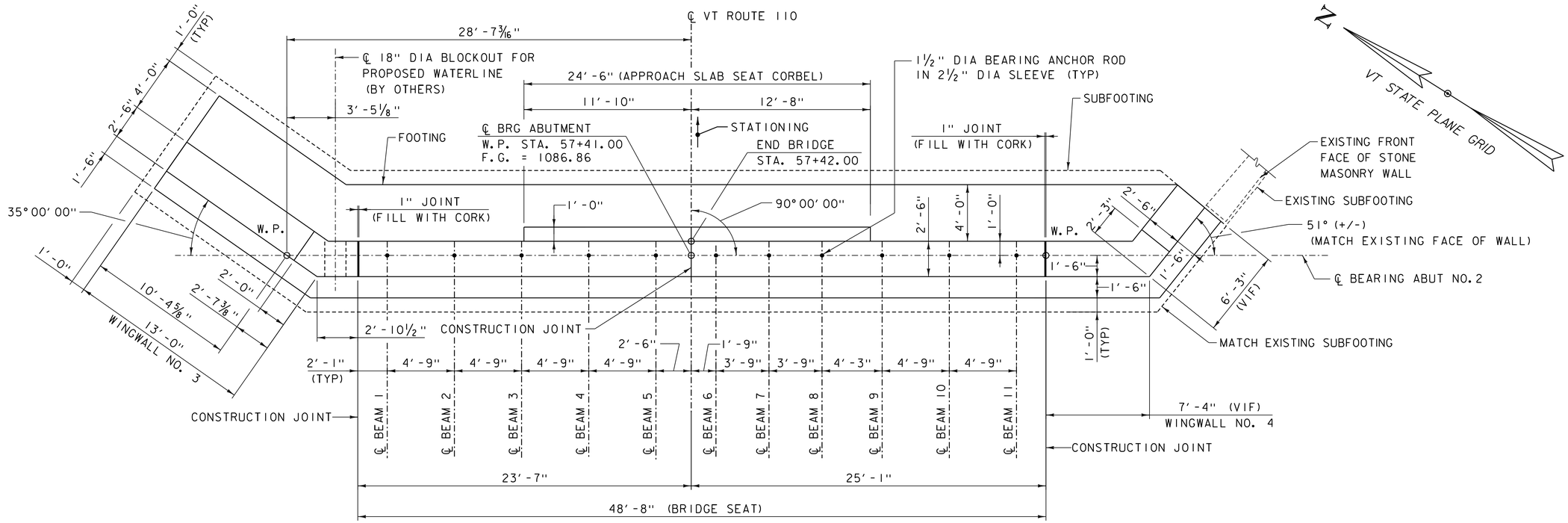

ABUTMENT NO. 2 PLAN

SCALE: 1/4″ = 1′-0″

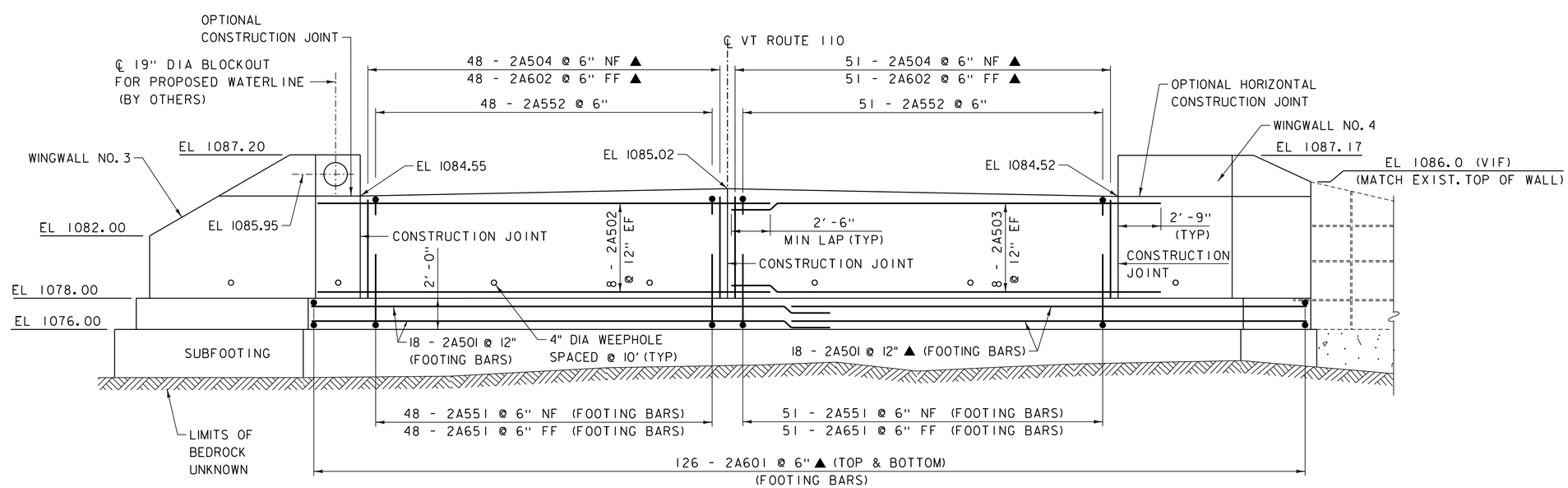

ABUTMENT NO. 2 ELEVATION

SCALE: 1/4″ = 1′-0″

NOTE

VIF = VERIFY IN FIELD
NF = NEAR FACE
FF = FAR FACE
EF = EACH FACE
▲ = CUT TO FIT IN FIELD
3″ CLEAR, UNLESS OTHERWISE SPECIFIED ON THE PLANS.
2′-6″ BAR LAP UNLESS OTHERWISE SPECIFIED ON THE PLANS.

McFarland Johnson

PROJECT NAME: BARRE TOWN	
PROJECT NUMBER: BF 0169(12)	
FILE NAME: zl2c576pln_abut_2.dgn	PLOT DATE: 1/14/2022
PROJECT LEADER: D. KULL	DRAWN BY: S. MERKWAN
DESIGNED BY: T. AGUILAR	CHECKED BY: R. JOY
ABUTMENT NO. 2 PLAN & ELEVATION	SHEET 36 OF 50

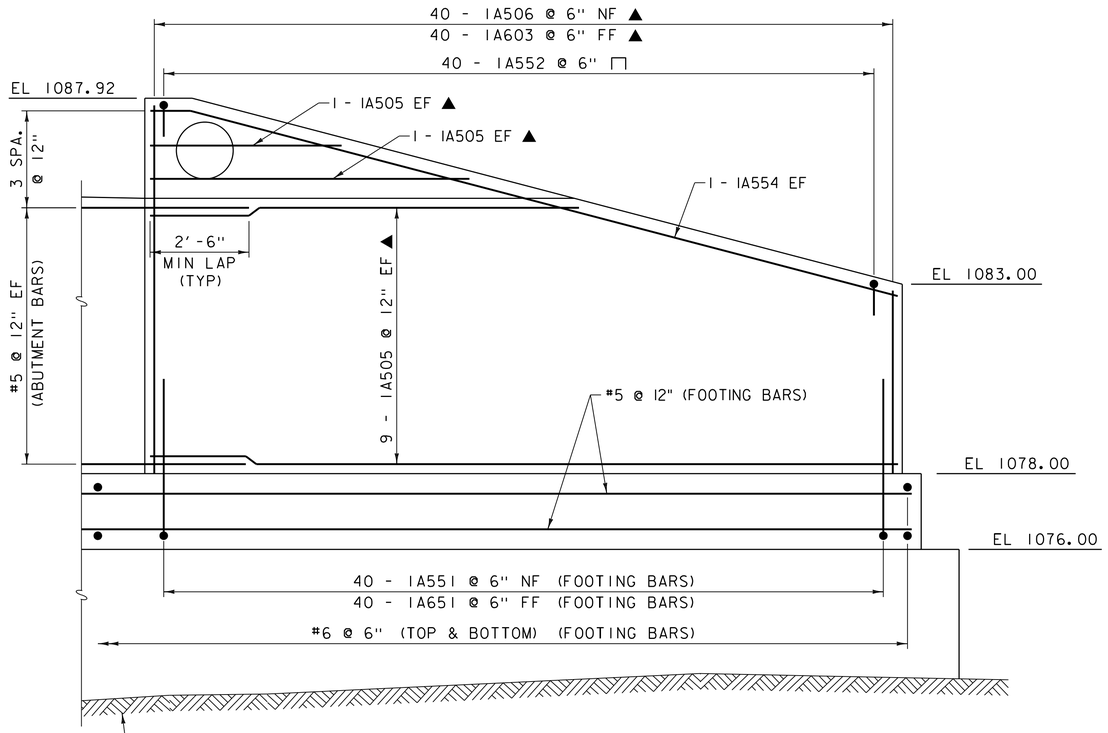

WINGWALL NO. 1 ELEVATION

SCALE: ½" = 1'-0"

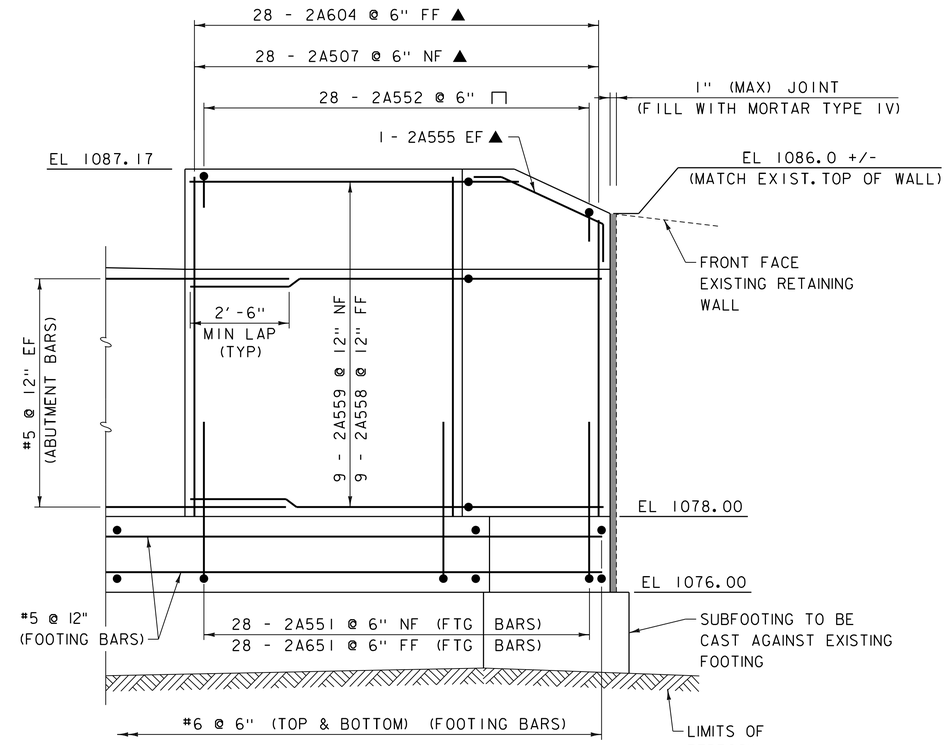

WINGWALL NO. 4 ELEVATION

SCALE: ½" = 1'-0"

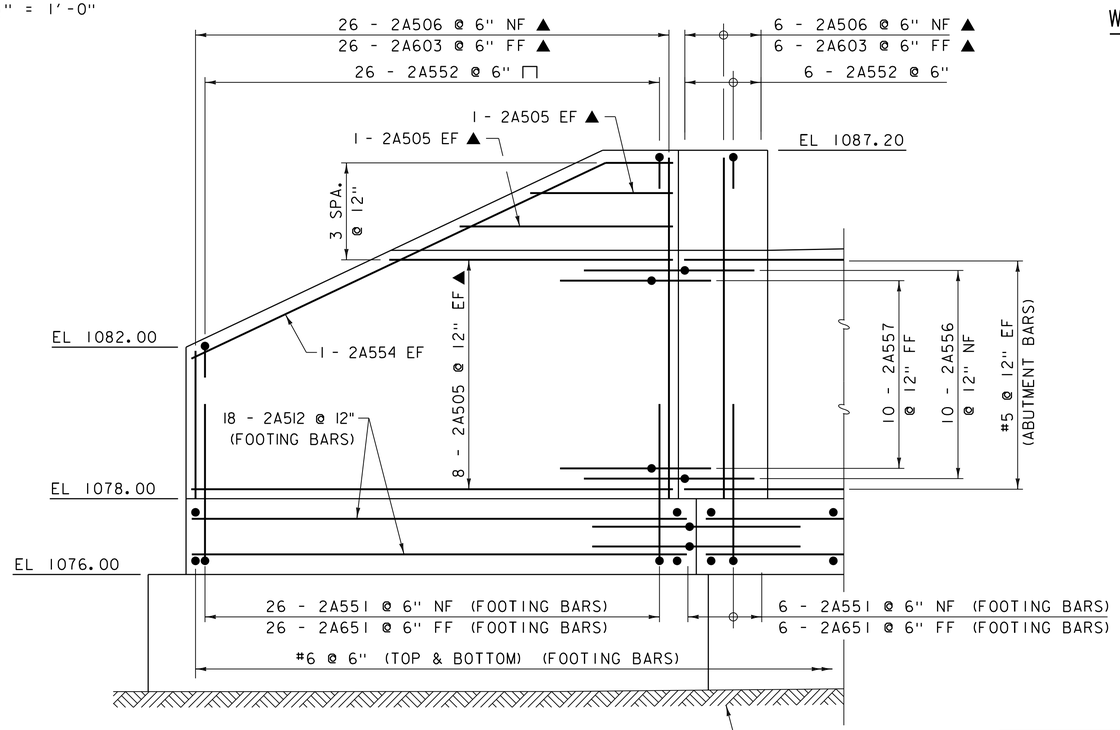

WINGWALL NO. 3 ELEVATION

SCALE: ½" = 1'-0"

NOTE

NF = NEAR FACE
FF = FAR FACE
EF = EACH FACE
▲ = CUT TO FIT IN FIELD
3" CLEAR, UNLESS OTHERWISE SPECIFIED ON THE PLANS.
2'-6" BAR LAP UNLESS OTHERWISE SPECIFIED ON THE PLANS.

McFarland Johnson

PROJECT NAME: BARRE TOWN	
PROJECT NUMBER: BF 0169(12)	
FILE NAME: zl2c576sub.dgn	PLOT DATE: 1/14/2022
PROJECT LEADER: D. KULL	DRAWN BY: S. MERKWAN
DESIGNED BY: T. AGUILAR	CHECKED BY: R. JOY
WINGWALL ELEVATIONS	SHEET 37 OF 50

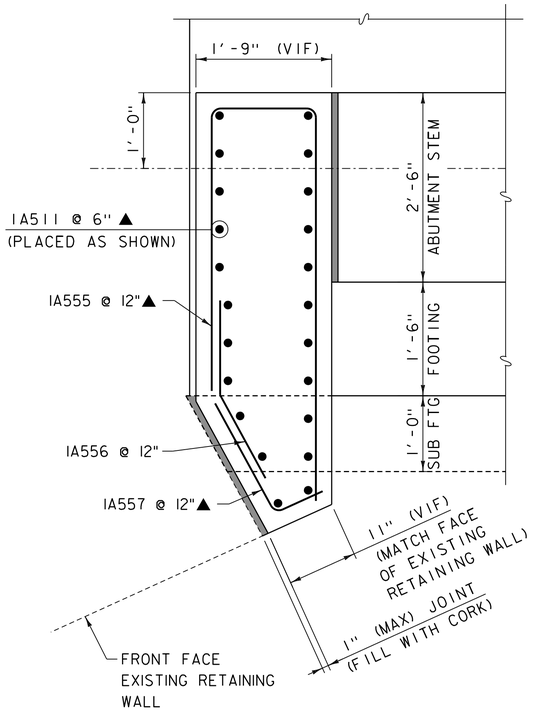

DETAIL "A"

SCALE: 1" = 1'-0"

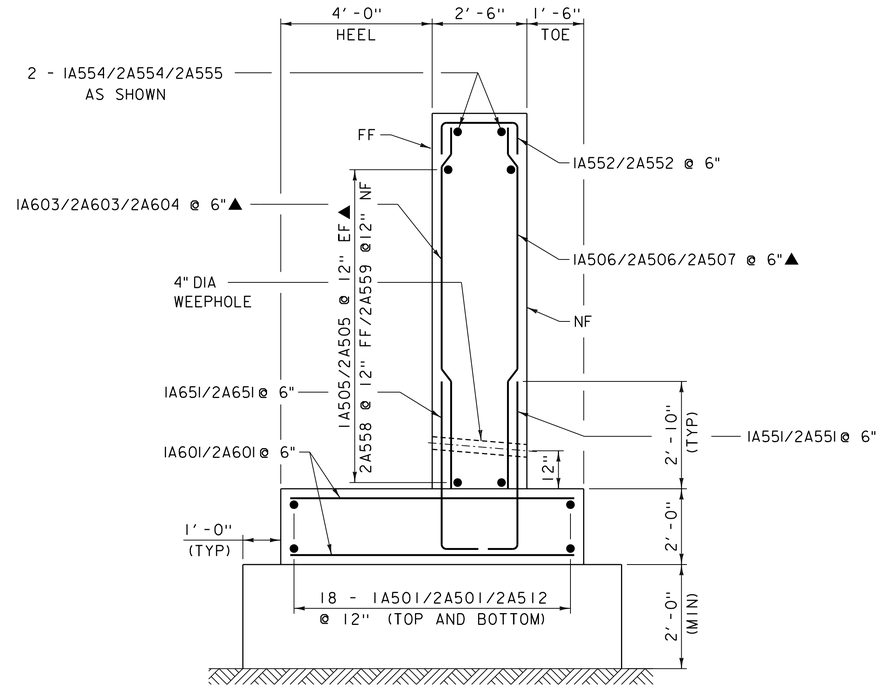

TYPICAL WINGWALL SECTION

SCALE: ½" = 1'-0"

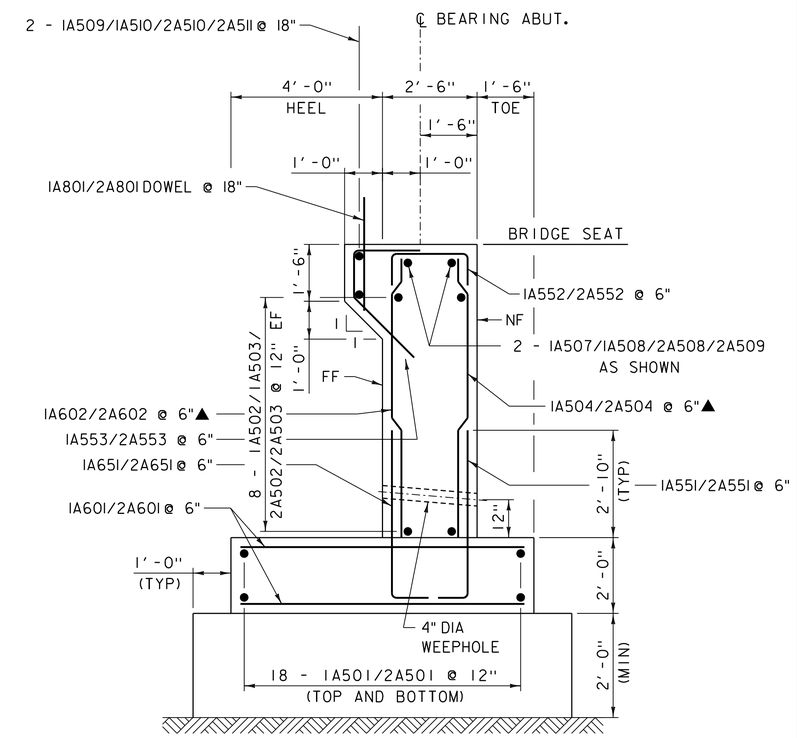

TYPICAL ABUTMENT SECTION
(AT APPROACH SLAB SEAT)

SCALE: ½" = 1'-0"

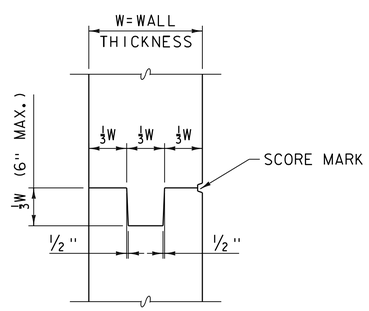

TYPICAL CONCRETE CONSTRUCTION JOINT

(NOT TO SCALE)

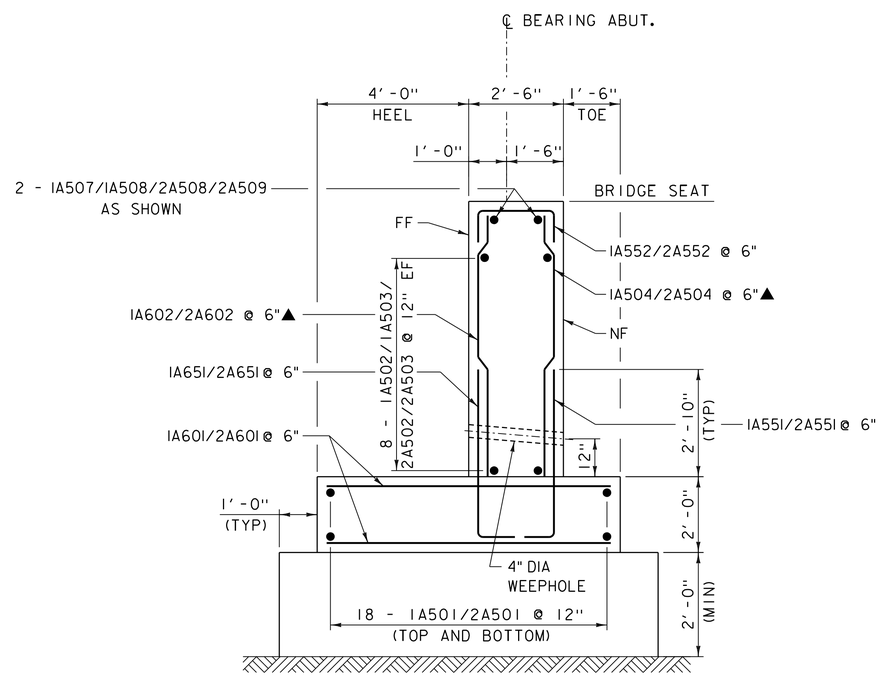

TYPICAL ABUTMENT SECTION

SCALE: ½" = 1'-0"

NOTE

NF = NEAR FACE
FF = FAR FACE
EF = EACH FACE
▲ = CUT TO FIT IN FIELD
3" CLEAR, UNLESS OTHERWISE SPECIFIED ON THE PLANS.
2'-6" BAR LAP UNLESS OTHERWISE SPECIFIED ON THE PLANS.

McFarland Johnson

PROJECT NAME: BARRE TOWN	
PROJECT NUMBER: BF 0169(12)	
FILE NAME: zl2c576sub.dgn	PLOT DATE: 1/14/2022
PROJECT LEADER: D. KULL	DRAWN BY: S. MERKWAN
DESIGNED BY: T. AGUILAR	CHECKED BY: R. JOY
ABUTMENT & WINGWALL SECTIONS	SHEET 38 OF 50

STATE OF VERMONT
AGENCY OF TRANSPORTATION

REINFORCING STEEL SCHEDULE

ITEM	EACH	SIZE	LENGTH	MARK	TYPE	A	B	C	D	E	F	G	H	J	K	R	O
	DECK AND SUPERSTRUCTURE																
	146	4	6'- 8"	S451	S5	0'- 8"	2'- 6"	0'- 7"	2'- 3"			0'- 8"					
✳	20	5	47'- 8"	S501	STR												
	16	5	47'- 8"	S502	STR												
	98	5	7'- 3"	S551	2	0'- 7"	6'- 8"	0'- 0"									
	20	8	47'- 8"	S801	STR												
	ABUTMENT 1																
	36	5	36'- 5"	1A501	STR												
	16	5	26'- 4"	1A502	STR												
	16	5	29'- 1"	1A503	STR												
△ ▲	104	5	9'- 8"	1A504	STR												
▲	22	5	19'- 6"	1A505	STR												
▲	40	5	9'- 8"	1A506	STR												
	2	5	26'- 4"	1A507	STR												
	2	5	23'- 1"	1A508	STR												
	2	5	17'- 5"	1A509	STR												
	2	5	15'- 11"	1A510	STR												
▲	22	5	9'- 5"	1A511	STR												
	142	5	5'- 5"	1A551	S10		0'- 10"	4'- 7"	0'- 0"								
	102	5	3'- 8"	1A552	S10		0'- 10"	2'- 0"	0'- 10"								
	69	5	4'- 4"	1A553	16	0'- 0"	0'- 10"	1'- 3"	2'- 3"				1'- 7"		1'- 7"		
	2	5	20'- 2"	1A554	19		1'- 0"	19'- 1"	0'- 0"				0'- 3"		1'- 0"		
▲	11	5	10'- 5"	1A555	S10		3'- 10"	1'- 5"	5'- 2"								
	11	5	2'- 0"	1A556	19		1'- 0"	1'- 0"	0'- 0"				0'- 7"		0'- 7"		
▲	11	5	2'- 4"	1A557	S10		1'- 8"	0'- 8"	0'- 0"								
△	286	6	7'- 6"	1A601	STR												
▲	102	6	9'- 8"	1A602	STR												
▲	40	6	9'- 8"	1A603	STR												
	142	6	5'- 7"	1A651	S10		1'- 0"	4'- 7"	0'- 0"								
✳	24	8	3'- 0"	1A801	STR												
	ABUTMENT 2																
△ ▲	38	5	32'- 6"	2A501	STR												
	16	5	29'- 1"	2A502	STR												
	16	5	27'- 7"	2A503	STR												
▲	99	5	6'- 9"	2A504	STR												
▲	20	5	12'- 0"	2A505	STR												
▲	32	5	8'- 11"	2A506	STR												
▲	28	5	8'- 11"	2A507	STR												
	2	5	23'- 1"	2A508	STR												
	2	5	24'- 7"	2A509	STR												
	2	5	11'- 4"	2A510	STR												
	2	5	12'- 2"	2A511	STR												
	18	5	12'- 9"	2A512	STR												
△	161	5	5'- 5"	2A551	S10		0'- 10"	4'- 7"	0'- 0"								
	159	5	3'- 8"	2A552	S10		0'- 10"	2'- 0"	0'- 10"								
	50	5	4'- 4"	2A553	16	0'- 0"	0'- 10"	1'- 3"	2'- 3"				1'- 7"		1'- 7"		
	2	5	13'- 8"	2A554	19		1'- 9"	11'- 11"	0'- 0"				0'- 9"		1'- 7"		
	2	5	6'- 11"	2A555	19		1'- 0"	5'- 11"	0'- 0"				0'- 1"		1'- 0"		
	10	5	5'- 0"	2A556	19		2'- 6"	2'- 6"	0'- 0"				1'- 5"		2'- 0"		
	10	5	4'- 0"	2A557	19		2'- 0"	2'- 0"	0'- 0"				1'- 2"		1'- 8"		
	9	5	10'- 9"	2A558	19		4'- 10"	5'- 11"	0'- 0"				3'- 9"		3'- 0"		
	9	5	13'- 1"	2A559	19		6'- 0"	7'- 1"	0'- 0"				4'- 8"		3'- 9"		
△	254	6	7'- 6"	2A601	STR												
▲	99	6	6'- 9"	2A602	STR												
	32	6	8'- 11"	2A603	STR												
▲	28	6	8'- 11"	2A604	STR												
	159	6	5'- 7"	2A651	S10		1'- 0"	4'- 7"	0'- 0"								
✳	18	8	3'- 0"	2A801	STR												
	APPROACH SLABS																
✳	68	5	19'- 8"	AS501	STR												
	42	5	34'- 1"	AS502	STR												
	42	5	30'- 6"	AS503	STR												
	80	9	20'- 11"	AS951	1	1'- 3"	19'- 8"					0'- 0"					

ITEM	EACH	SIZE	LENGTH	MARK	TYPE	A	B	C	D	E	F	G	H	J	K	R	O

~ NOTES ~

1. UNLESS OTHERWISE DESIGNATED, ALL BAR REINFORCEMENT FOR CONCRETE IN SIZES UP TO AND INCLUDING NO. 18 SHALL CONFORM TO THE REQUIREMENTS OF THE "SPECIFICATIONS FOR DEFORMED BILLET-STEEL BARS FOR CONCRETE REINFORCEMENT", AASHTO M 31 (ASTM A 615-SI). ALL BARS SHALL BE GRADE 60, UNLESS OTHERWISE DESIGNATED.
2. FOR TYPICAL BENDING DETAILS, RECOMMENDED PIN DIAMETER "D" OF BENDS AND HOOKS, AND OTHER STANDARD PRACTICE, SEE CURRENT CONCRETE REINFORCING STEEL INSTITUTE "MANUAL OF STANDARD PRACTICE".
3. BARS WHICH REQUIRE MORE ACCURATE BENDING THAN STANDARD PRACTICES SHOULD HAVE LIMITS INDICATED.
4. ALL DIMENSIONS ARE OUT TO OUT OF BAR EXCEPT "A" AND "G" ON STANDARD 180 DEGREE AND 135 DEGREE HOOKS.
5. "J" DIMENSION ON 180 DEGREE HOOKS TO BE SHOWN ONLY WHERE NECESSARY TO RESTRICT HOOK SIZE. OTHERWISE, STANDARD HOOKS ARE TO BE USED.
6. "H" DIMENSION ON STIRRUPS TO BE SHOWN ONLY WHEN NECESSARY TO MAINTAIN CLEARANCES.
7. WHERE SLOPE DIFFERS FROM 45 DEGREES, DIMENSIONS "H" AND "K" MUST BE SHOWN.
8. ▲ DENOTES BARS TO BE CUT IN FIELD.
9. ✳ DENOTES ONE EXTRA BAR ADDED FOR TESTING PURPOSES.
10. △ DENOTES TWO EXTRA BARS ADDED FOR TESTING PURPOSES.
11. E IN BAR MARK PREFIX DENOTES EPOXY COATED REINFORCING STEEL.

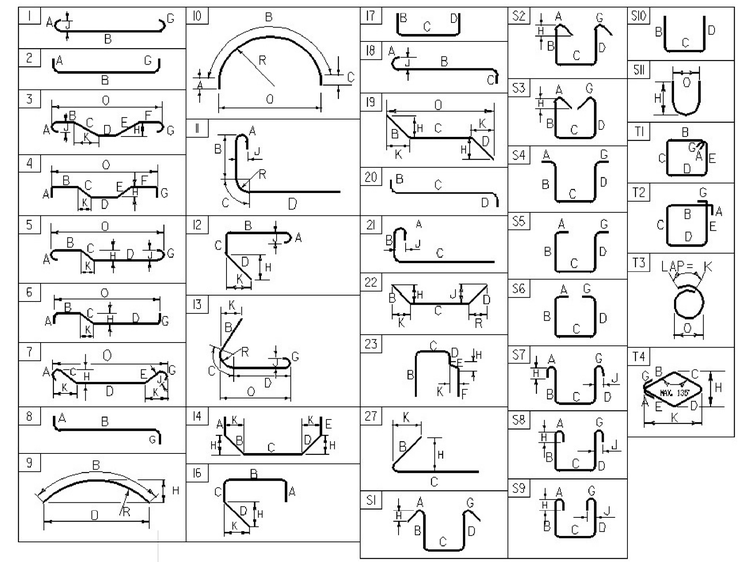

ASTM STANDARD REINFORCING BARS

BAR SIZE DESIGNATION	WEIGHT POUNDS PER FOOT	NOMINAL DIMENSIONS ROUND SECTION DIAMETER INCHES	AREA INCHES²	PERIMETER INCHES
#3	0.376	0.375	0.11	1.178
#4	0.668	0.500	0.20	1.571
#5	1.043	0.625	0.31	1.963
#6	1.502	0.750	0.44	2.356
#7	2.04	0.875	0.60	2.749
#8	2.670	1.000	0.79	3.14
#9	3.400	1.13	1.00	3.54
#10	4.3	1.270	1.27	3.990
#11	5.31	1.410	1.56	4.430
#14	7.65	1.69	2.25	5.32
#18	13.60	2.26	4.00	7.09

~ REINFORCING STEEL CORROSION RESISTANCE LEVEL ~

THE REINFORCING STEEL MARKS IN THIS SCHEDULE INDICATE THE REQUIRED BAR CORROSION RESISTANCE LEVEL. CORROSION RESISTANCE LEVEL IS DENOTED WITH A .2 FOR LEVEL TWO SUFFIX OR .3 FOR LEVEL THREE SUFFIX. .1 FOR LEVEL ONE IS TO BE OMITTED. THE BAR MATERIAL TYPE AND BAR STEEL GRADE PROVIDED FOR EACH CORROSION LEVEL WILL BE RECORDED ON THE PLAN SET PI SHEET FOR AS-BUILT RECORD PLAN ARCHIVES.

PROJECT NAME: BARRE TOWN
PROJECT NUMBER: BF 0169(12)

FILE NAME: z12c576rein_sch.dgn
PROJECT LEADER: D. KULL
DESIGNED BY: C. GAGNE
REINFORCING STEEL SCHEDULE

PLOT DATE: 1/14/2022
DRAWN BY: S. MERKWAN
CHECKED BY: D. KULL
SHEET 39 OF 50

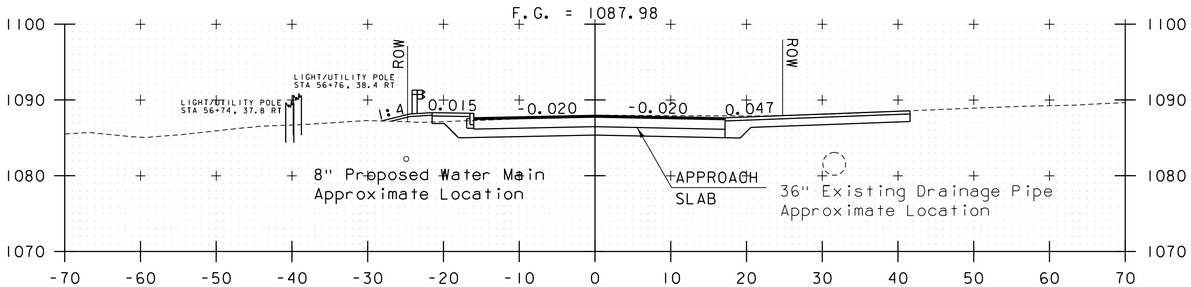

56+75

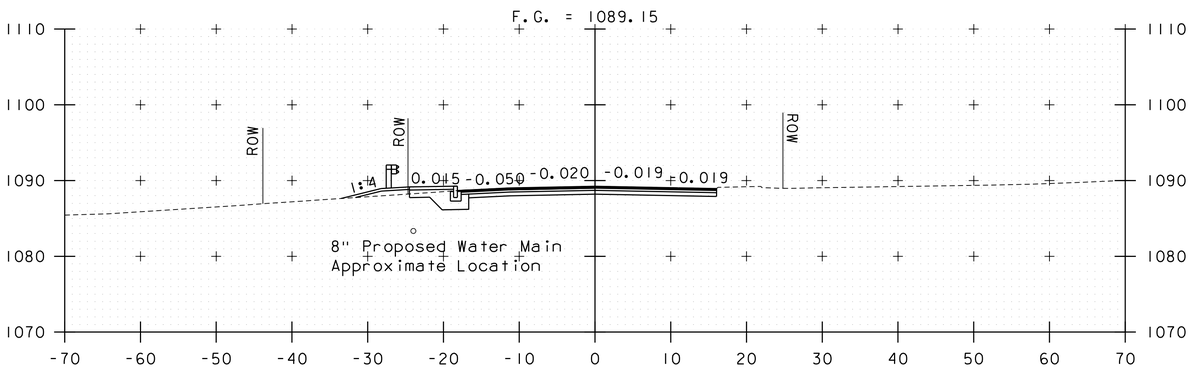

56+50

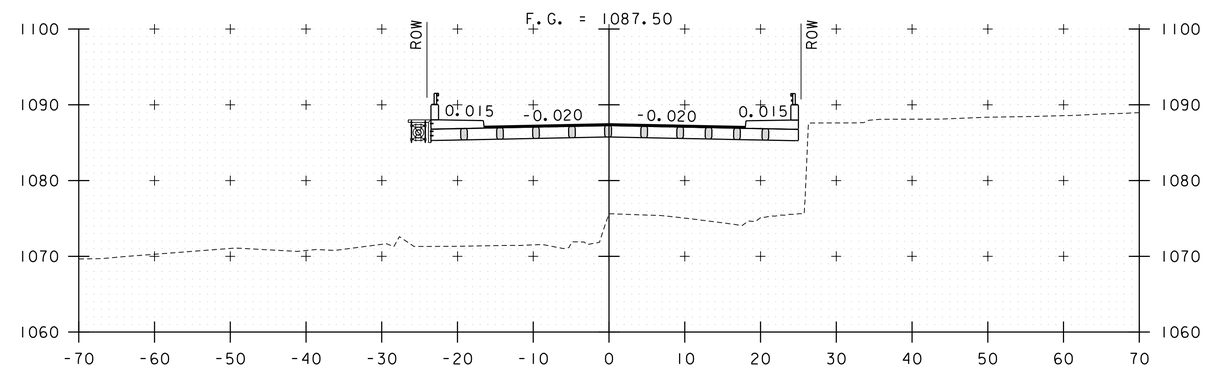

57+00

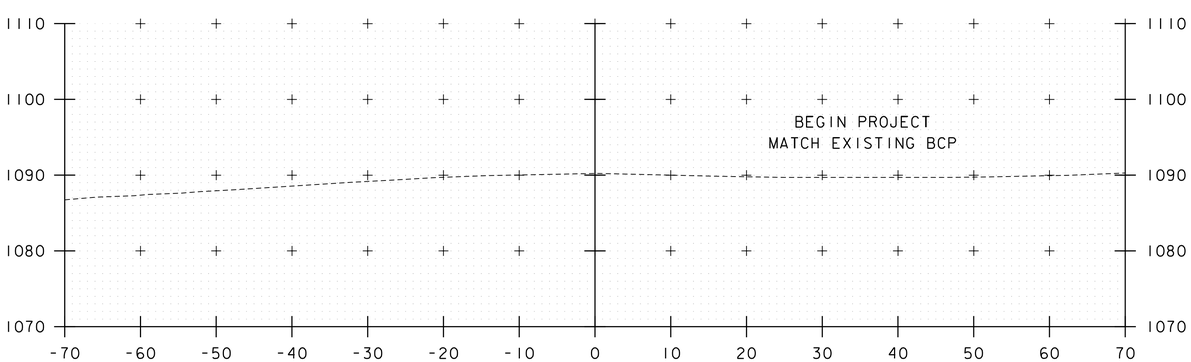

56+35

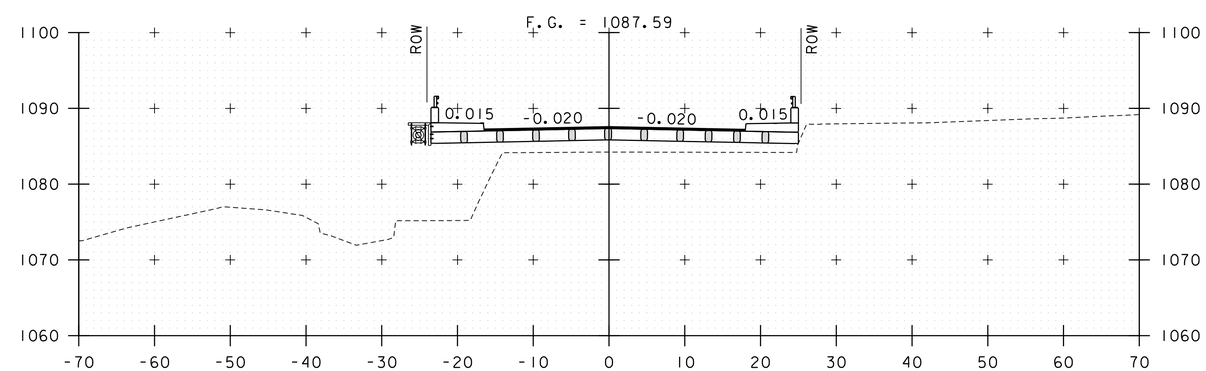

56+94

BEGIN BRIDGE

STA. 56+35 TO STA. 57+00

McFarland Johnson

PROJECT NAME: BARRE TOWN	
PROJECT NUMBER: BF 0169(12)	
FILE NAME: zl2c576xsl.dgn	PLOT DATE: 1/14/2022
PROJECT LEADER: D. KULL	DRAWN BY: M. LOVETT
DESIGNED BY: S. LISTER	CHECKED BY: S. IRELAND
VTIIO CROSS SECTIONS 1	SHEET 40 OF 50

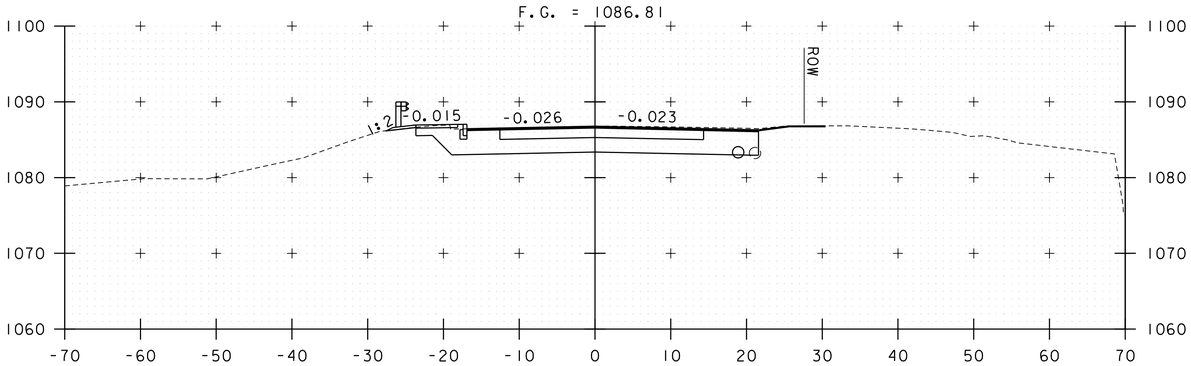

57+65

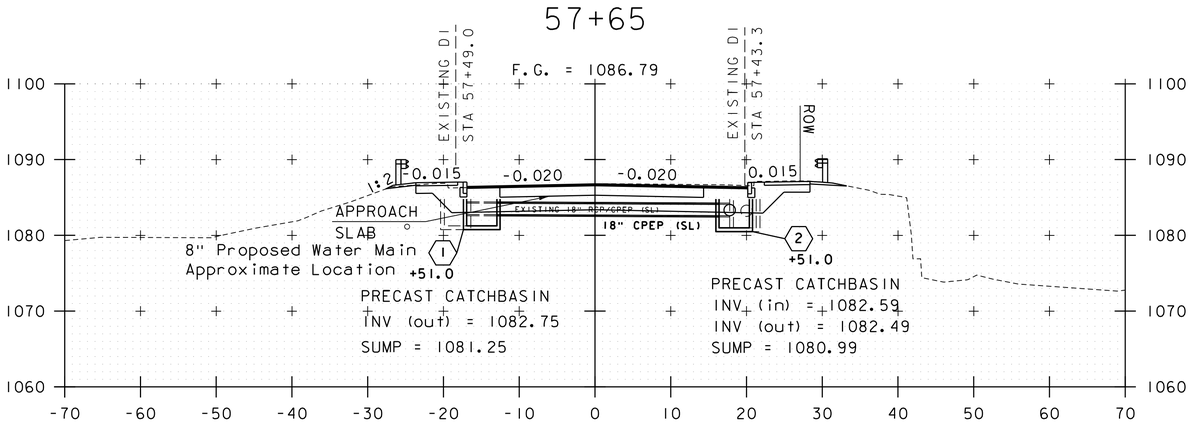

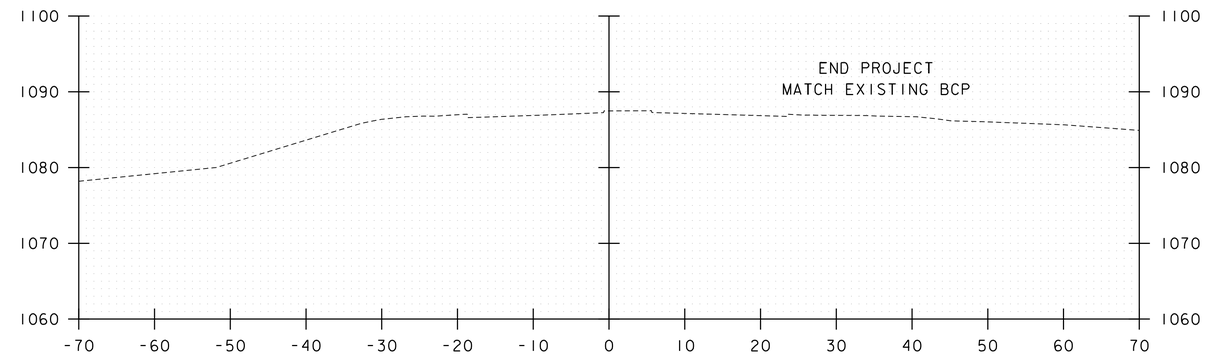

57+85

57+50

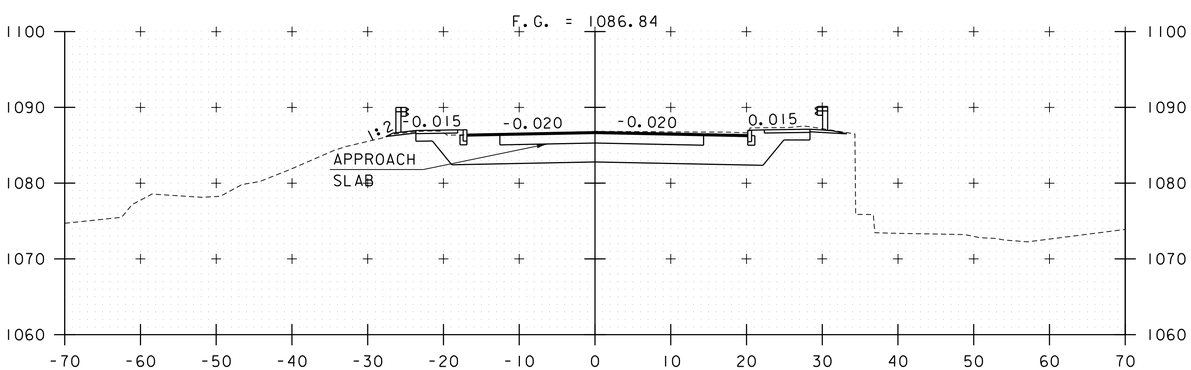

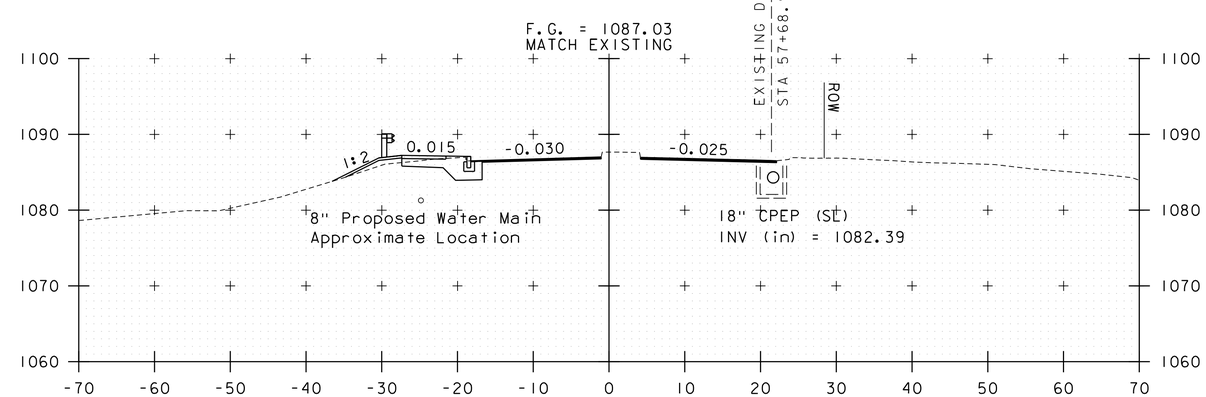

57+42

END BRIDGE

57+75

STA. 57+42 TO STA. 57+85

McFarland Johnson

PROJECT NAME: BARRE TOWN	
PROJECT NUMBER: BF 0169(12)	
FILE NAME: zl2c576bdr_nul.dgn	PLOT DATE: 1/14/2022
PROJECT LEADER: D. KULL	DRAWN BY: M. LOVETT
DESIGNED BY: S. LISTER	CHECKED BY: S. IRELAND
VTHO CROSS SECTIONS 2	SHEET 41 OF 50

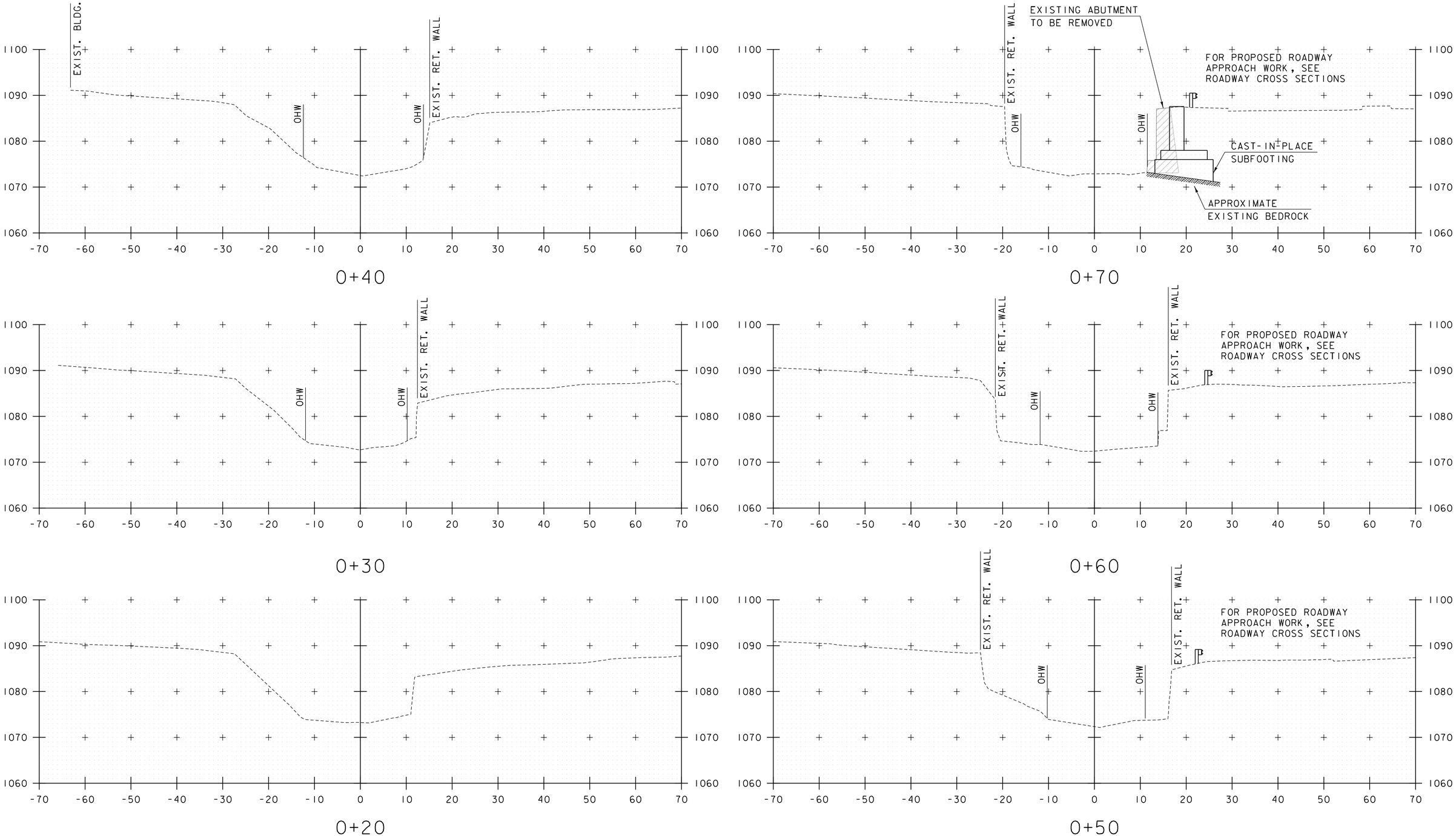

STA. 0+20 TO STA. 0+70

McFarland Johnson

PROJECT NAME: BARRE TOWN	
PROJECT NUMBER: BF 0169(12)	
FILE NAME: zl2c576xsl.dgn	PLOT DATE: 1/14/2022
PROJECT LEADER: D. KULL	DRAWN BY: S. MERKWAN
DESIGNED BY: S. LISTER	CHECKED BY: S. IRELAND
CHANNEL CROSS SECTIONS 1	SHEET 42 OF 50

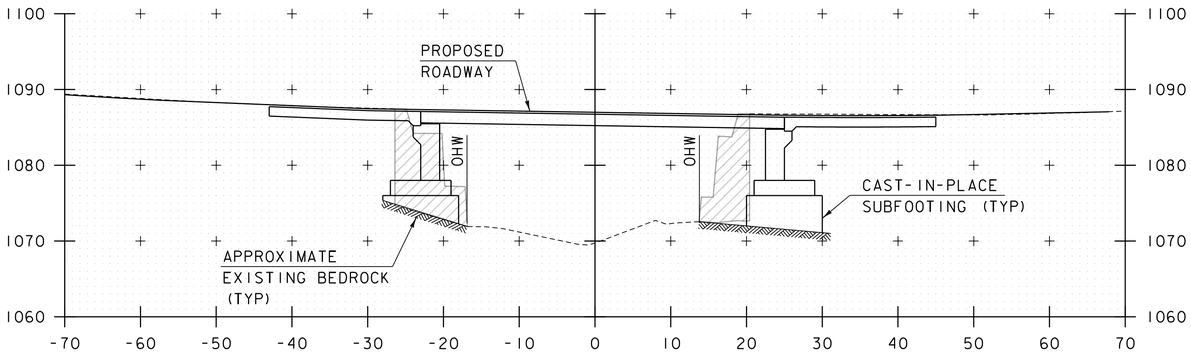

1+00

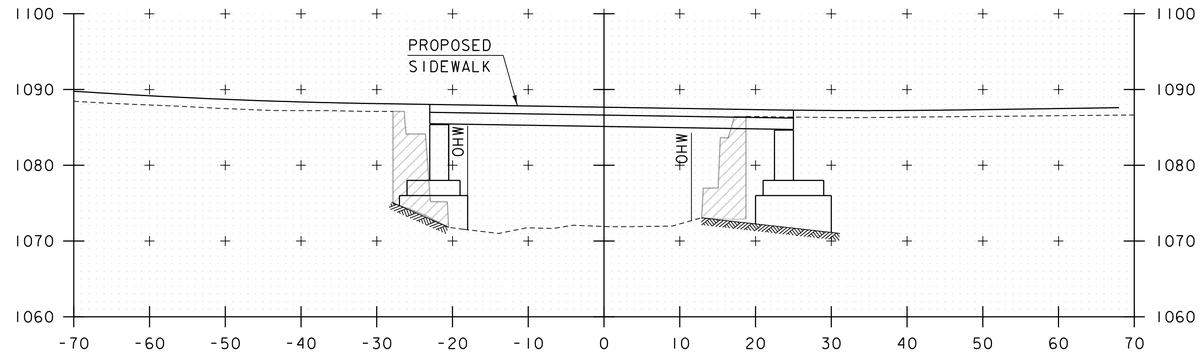

1+30

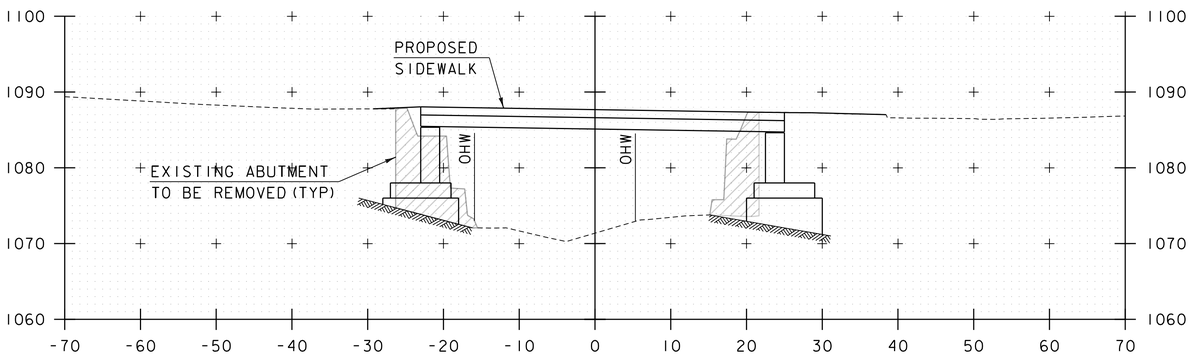

0+90

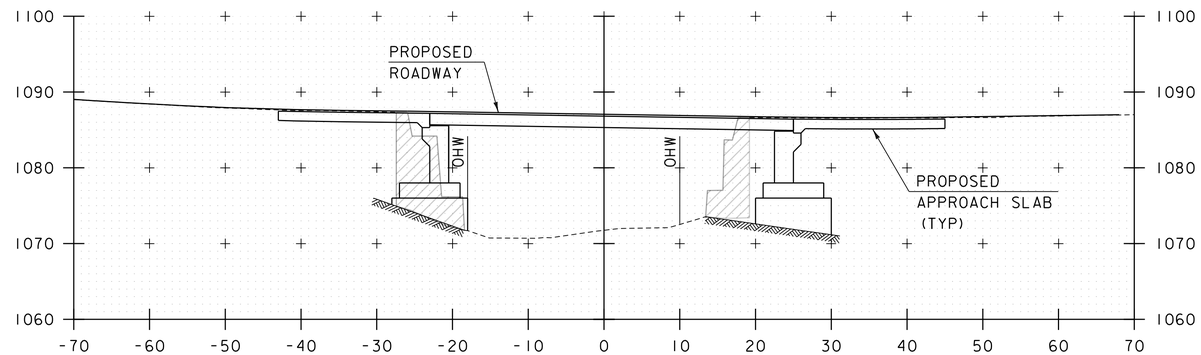

1+20

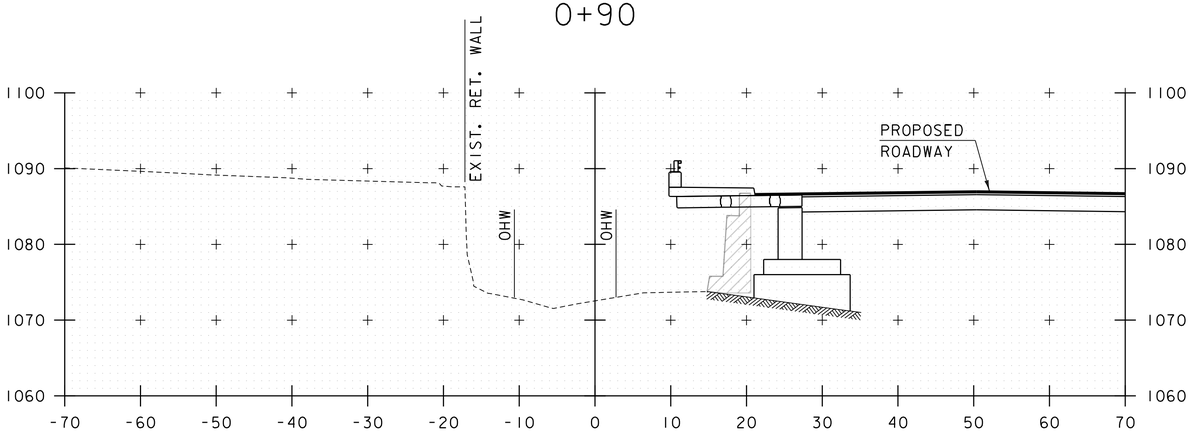

0+80

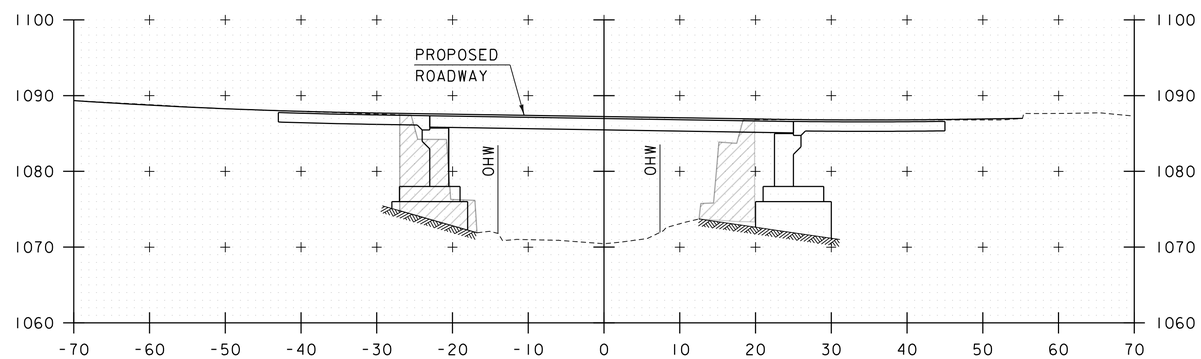

1+10

STA. 0+80 TO STA. 1+30

McFarland Johnson

PROJECT NAME: BARRE TOWN	
PROJECT NUMBER: BF 0169(12)	
FILE NAME: zl2c576xsl.dgn	PLOT DATE: 1/14/2022
PROJECT LEADER: D. KULL	DRAWN BY: S. MERKWAN
DESIGNED BY: S. LISTER	CHECKED BY: S. IRELAND
CHANNEL CROSS SECTIONS 2	SHEET 43 OF 50

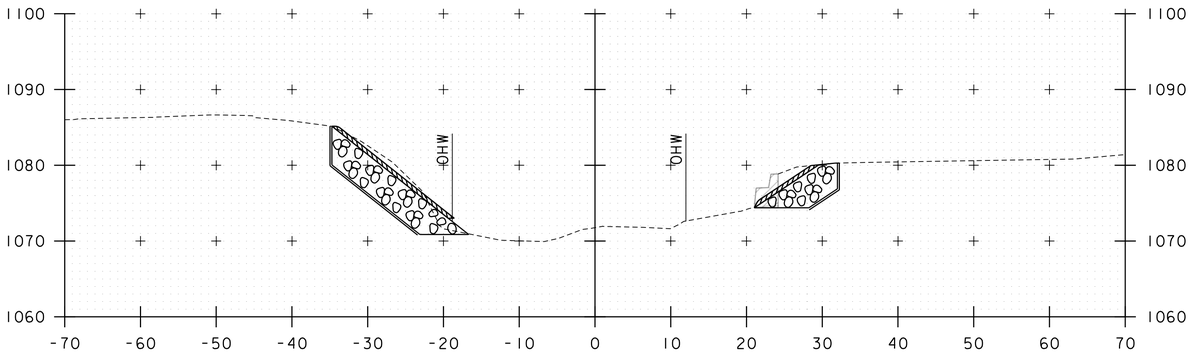

STA. 1+65.0
END GEOTEXTILE UNDER STONE FILL
END STONE FILL, TYPE IV
END GRUBBING MATERIAL (12")

1+60

STA. 1+62.8
END GEOTEXTILE UNDER STONE FILL
END STONE FILL, TYPE IV
END GRUBBING MATERIAL (12")

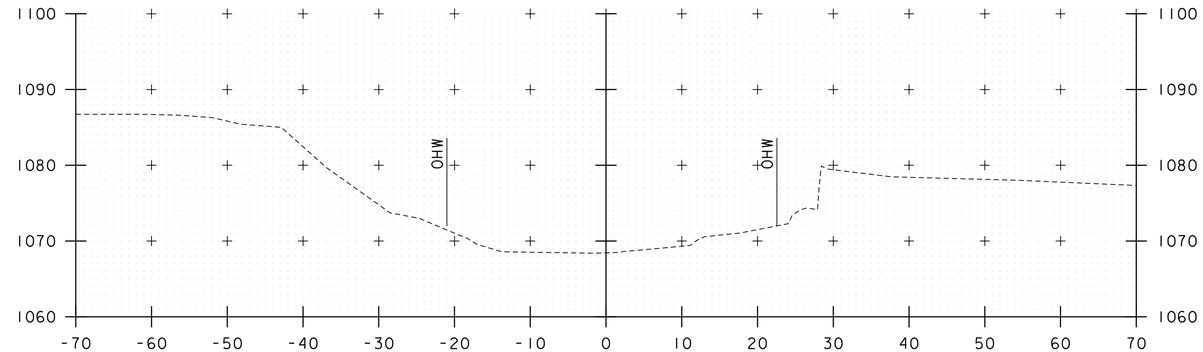

1+90

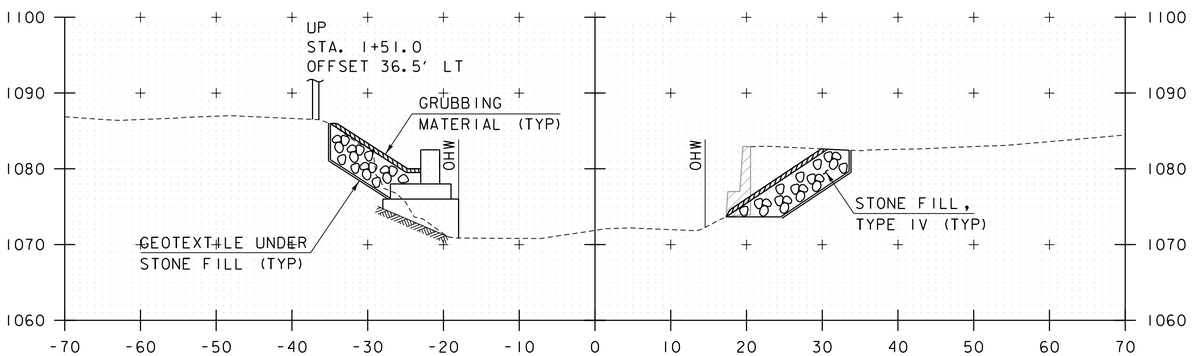

1+50

STA. 1+39.1
BEGIN GEOTEXTILE UNDER STONE FILL
BEGIN STONE FILL, TYPE IV
BEGIN GRUBBING MATERIAL (12")

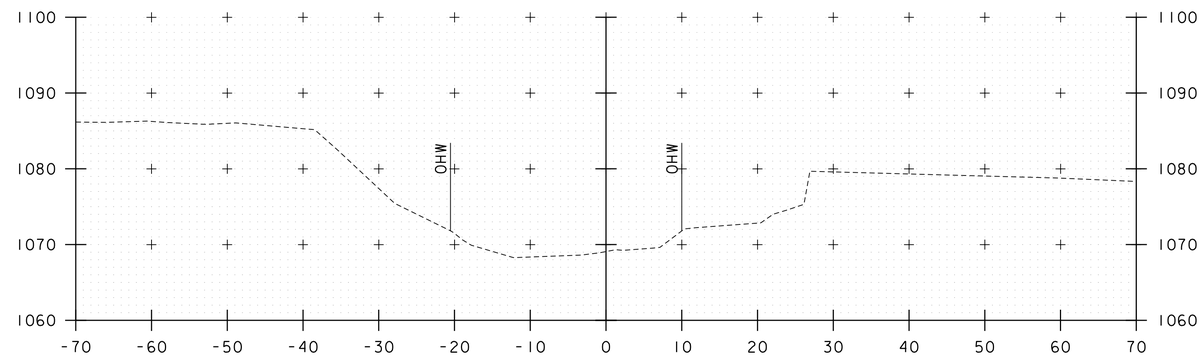

1+80

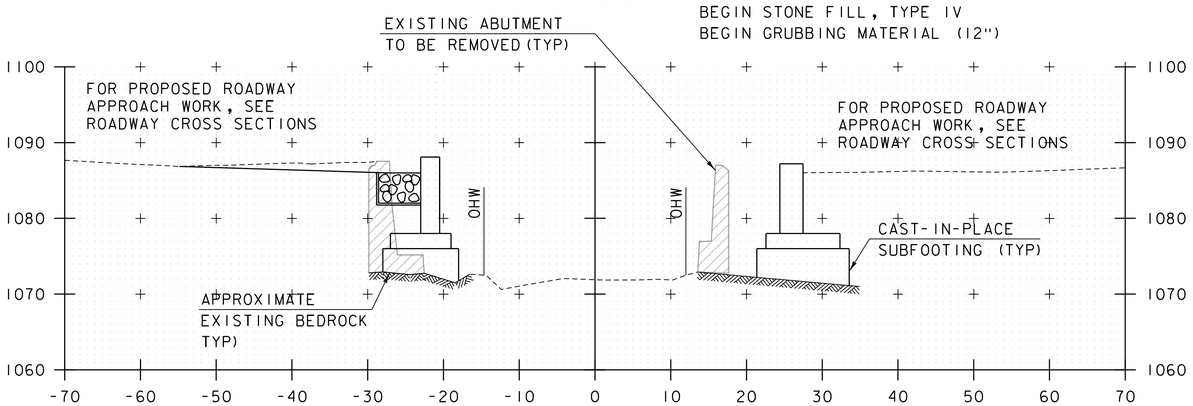

STA. 1+39.8
BEGIN GEOTEXTILE UNDER STONE FILL
BEGIN STONE FILL, TYPE IV
BEGIN GRUBBING MATERIAL (12")

1+40

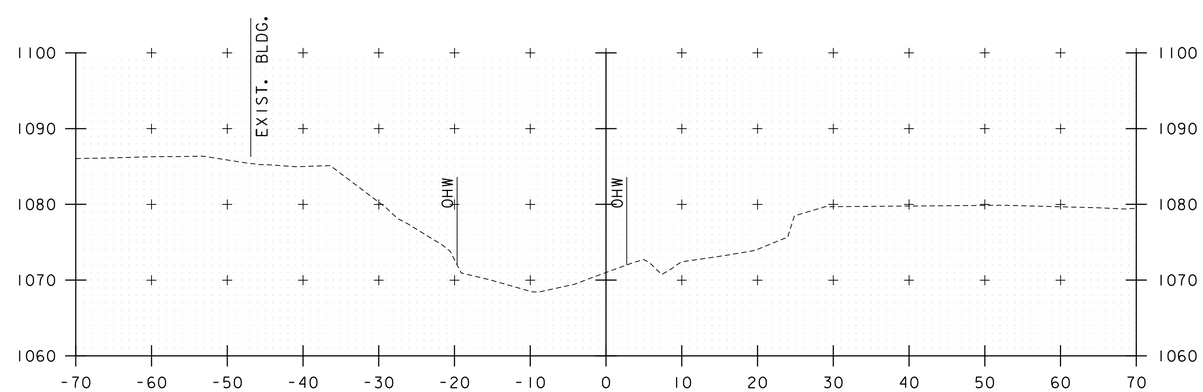

1+70

STA. 1+40 TO STA. 1+90

McFarland Johnson

PROJECT NAME: BARRE TOWN	
PROJECT NUMBER: BF 0169(12)	
FILE NAME: zl2c576xsl.dgn	PLOT DATE: 1/14/2022
PROJECT LEADER: D. KULL	DRAWN BY: S. MERKWAN
DESIGNED BY: S. LISTER	CHECKED BY: S. IRELAND
CHANNEL CROSS SECTIONS 3	SHEET 44 OF 50

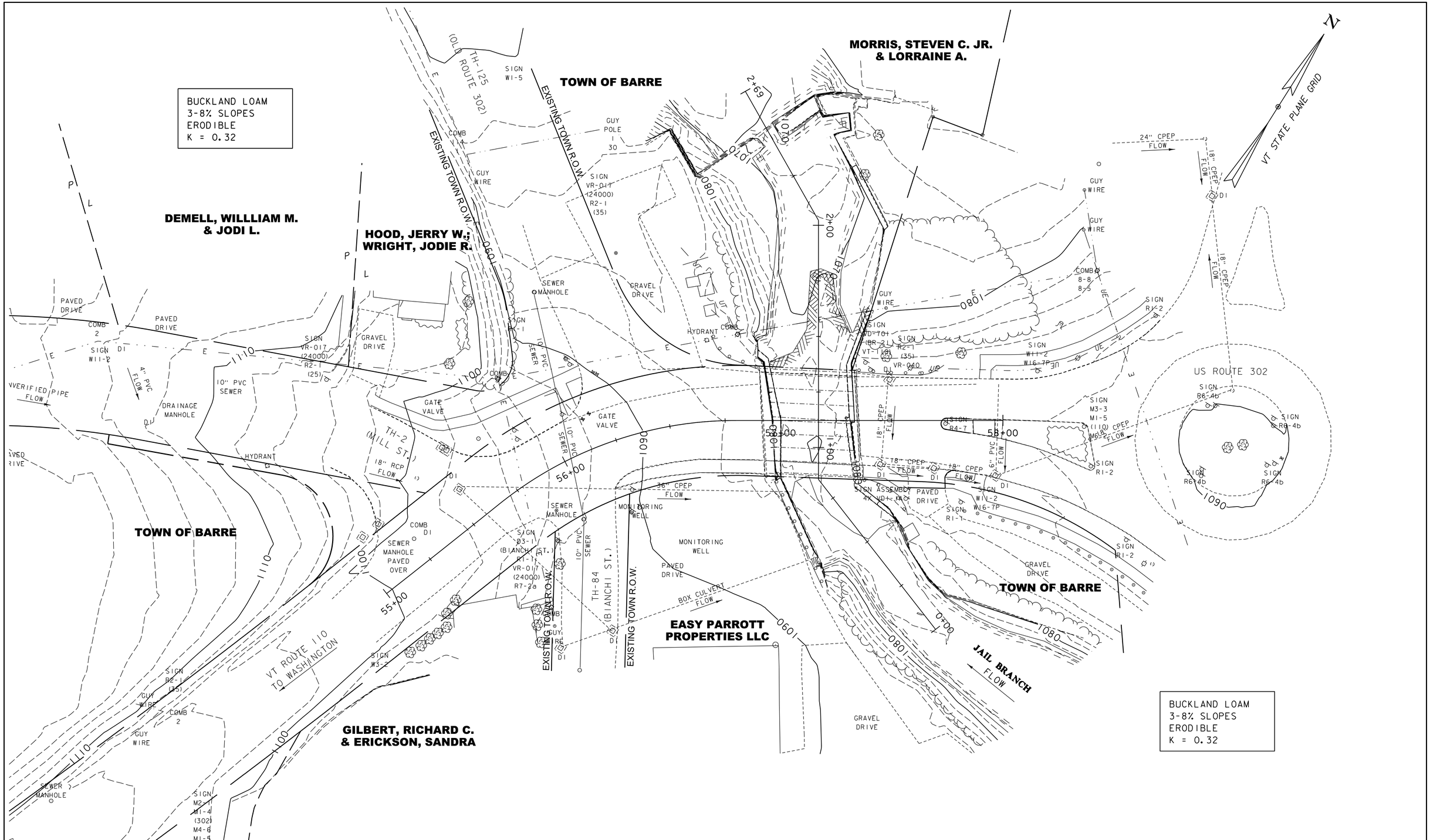

SCALE 1" = 20'-0"
20 0 20

McFarland Johnson

PROJECT NAME: BARRE TOWN	
PROJECT NUMBER: BF 0169(12)	
FILE NAME: zl2c576bdr_exc.dgn	PLOT DATE: 1/14/2022
PROJECT LEADER: D. KULL	DRAWN BY: M. LOVETT
DESIGNED BY: S. LISTER	CHECKED BY: S. IRELAND
EXISTING CONDITIONS SITE PLAN	SHEET 45 OF 50

REMOVAL AND DISPOSAL OF GUARDRAIL

STA 56+70.8 - STA 56+89.2 LT
STA 57+34.5 - STA 57+73.5 LT
STA 57+37.4 - STA 57+57.1 RT

STEEL BEAM GUARDRAIL, GALVANIZED

STA 56+43.0 - STA 56+73.4 LT
STA 57+58.4 - STA 57+86.0 LT

GUARDRAIL APPROACH SECTION, MGS TO CONCRETE END SECTON, TL-3

STA 56+73.4 - STA 56+91.5 LT
STA 57+40.3 - STA 57+56.0 RT
STA 57+40.3 - STA 57+58.4 LT

ANCHOR FOR STEEL BEAM RAIL

STA 56+43 LT
STA 57+56 RT
STA 57+86 LT

STEEL BEAM GUARDRAIL, GALVANIZED 25 FT RADIUS

STA 57+13.1 - STA 57+78.3 RT

PROPOSED DRAINAGE

1 STA STA 57+51.0 RT TO 57+51.0 LT
NEW 18" X 31' CPEP
NEW 4' DIA. PRCCB
W/ CI GRATE TYPE D AT 57+51.0 LT

2 STA STA 57+68.9 RT TO 57+51.0 RT
NEW 18" X 16' CPEP
NEW 4' DIA. PRCCB
W CI GRATE TYPE D AT 57+51.0 RT

REMOVE EXISTING CATCH BASIN

3 STA 57+44.8 RT

4 STA 57+48.9 LT

VERTICAL GRANITE CURB

STA 56+38.8 - STA 56+94.0 LT
STA 57+42.0 - STA 57+85.0 LT
STA 56+87.7 - STA 56+94.0 RT
STA 57+42.0 - STA 57+57.4 RT

PORTLAND CEMENT CONCRETE SIDEWALK 5-INCH

STA 56+38.8 - STA 56+94.0 LT
STA 57+42.0 - STA 57+89.8 LT
STA 56+87.7 - STA 56+94.0 RT
STA 57+42.0 - STA 57+57.4 RT

DETECTABLE WARNING SURFACE (DWS)

STA 56+38.8 LT
STA 57+89.5 RT

STONE FILL, TYPE IV

STA 56+79.5 - STA 57+00.2 LT
STA 57+29.5 - STA 57+51.6 RT

GEOTEXTILE UNDER STONE FILL

STA 56+79.5 - STA 57+00.2 LT
STA 57+29.5 - STA 57+51.6 RT

CONSTRUCT DRIVES

STA 56+50 RT
STA 57+65 RT

STREET LIGHT ASSEMBLY

STA 57+85.5 LT

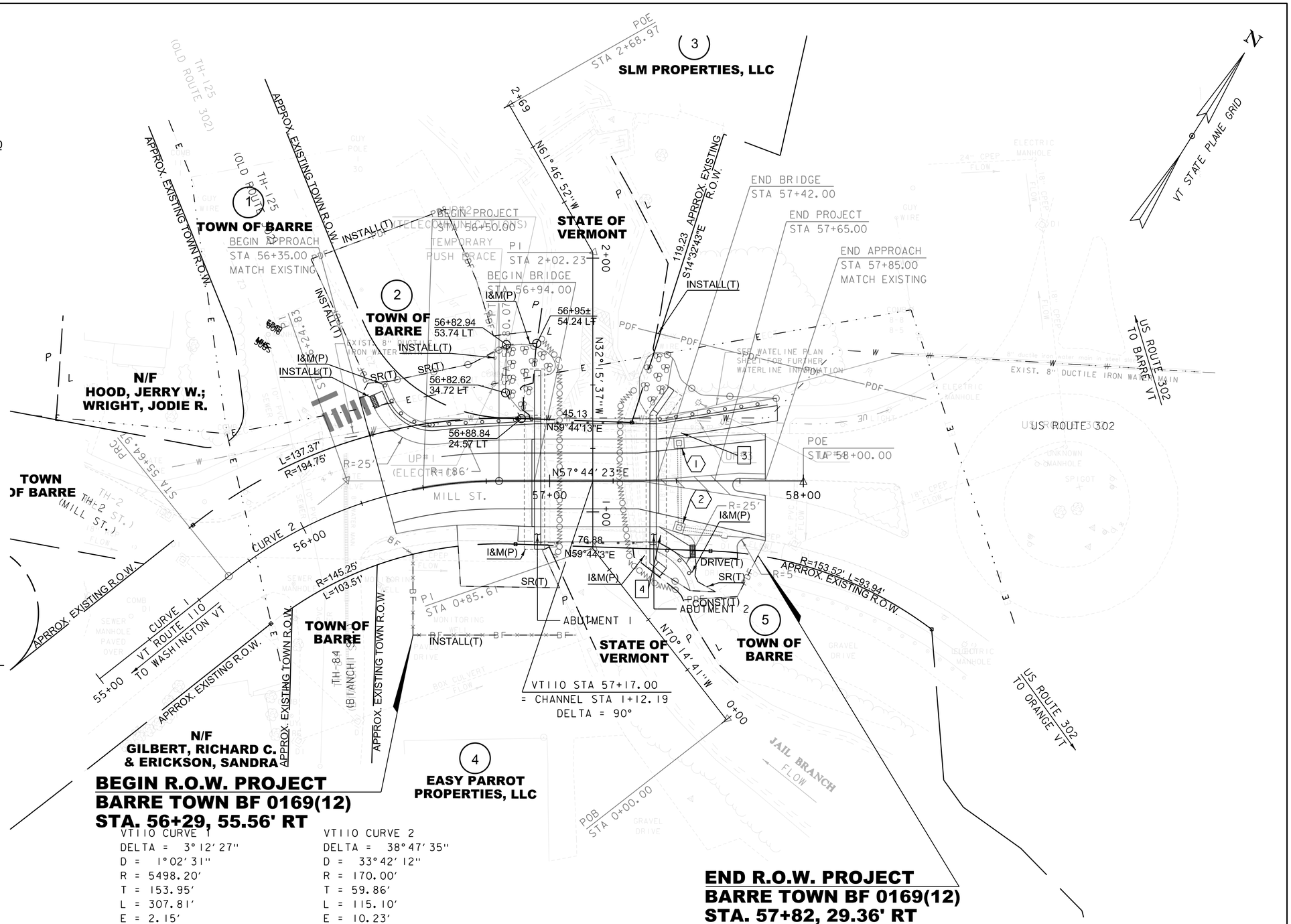

VT110 CURVE 1
DELTA = 3°12'27"
D = 1°02'31"
R = 5498.20'
T = 153.95'
L = 307.81'
E = 2.15'
BRG BHD = N22°09'14.68"E

VT110 CURVE 2
DELTA = 38°47'35"
D = 33°42'12"
R = 170.00'
T = 59.86'
L = 115.10'
E = 10.23'
BRG AHD = N57°44'23"E

LINES SHOWN ON THIS PLAN AS EXISTING PROPERTY LINES P/L ARE BELIEVED TO BE ACCURATE BUT SHOULD NOT BE RELIED UPON FOR PURPOSES UNRELATED TO THE STATE OF VERMONT'S ACQUISITION OF LAND AND RIGHTS FOR THIS PROJECT.

FOR R.O.W. USE ONLY

SCALE 1" = 20'-0"
20 0 20

SCALE 1" = 20'-0"
20 0 20

McFarland Johnson

PROJECT NAME: BARRE TOWN	
PROJECT NUMBER: BF 0169(12)	
FILE NAME: NAME$DGN	PLOT DATE: 1/14/2022
PROJECT LEADER: T. MAHENDRARATNAM	DRAWN BY: A. EGIZI
DESIGNED BY: McFARLAND JOHNSON	CHECKED BY: A. PROULX
R.O.W. LAYOUT SHEET	SHEET 46 OF 50

STATE OF VERMONT
AGENCY OF TRANSPORTATION

RIGHT - OF - WAY DETAIL SHEET

TABLE OF PROPERTY ACQUISITION

PARCEL NO.	PROPERTY OWNER	ROW LAYOUT NO.	BEGINNING STATION	ENDING STATION	FEE ACQUISITION AREA±	REMAINDER AREA±	RIGHT TYPE	RIGHT T / P	RIGHT AREA ±	RECORDING DATA TITLE	RECORDING DATA DATE	RECORDING DATA TOWN / CITY	RECORDING DATA BOOK	RECORDING DATA PAGE	REMARKS
1	TOWN OF BARRE	1	56+32 LT	56+39 LT			INSTALL	T							PDF
			56+35 LT	56+81 LT			SLOPE	T	562 SF						INCL. PDF
			56+38 LT	56+50 LT			INSTALL	T							SIDEWALK & CURB
			56+42 LT	56+52 LT			INSTALL & MAINTAIN	P							GUARDRAIL
2	TOWN OF BARRE	1	56+39 LT	56+83± LT			INSTALL	T							PDF
			56+50 LT	56+89± LT			SLOPE	T	661 SF						INCL. EC & GUARDRAIL REMOVAL
			56+79 LT				INSTALL	T							TEMP. PUSH BRACE
			56+82.62 LT	56+95± LT			INSTALL & MAINTAIN	P	246 SF						STONE FILL, BRIDGE FOOTING
3	SLM PROPERTIES, LLC	1	57+42 LT	57+44 LT			INSTALL	T							PDF
4	EASY PARROT PROPERTIES, LLC	1	56+29 RT	57+10 RT			INSTALL	T							PDF
			56+60 RT	57+04 RT			SLOPE	T	600 SF						INCL. EC
			56+90.50 RT	56+98.50 RT			INSTALL & MAINTAIN	P							BRIDGE FOOTING
5	TOWN OF BARRE	1	57+32 RT	57+65 RT			SLOPE	T	279 SF						INCL. EC
			57+37.50 RT	57+45.50 RT			INSTALL & MAINTAIN	P							BRIDGE FOOTING
			57+43 RT	57+82 RT			CONSTRUCTION	T	358 SF						INCL. PDF
			57+46 RT	57+58 RT			INSTALL & MAINTAIN	P							GUARDRAIL
			57+57 RT	57+74 RT			DRIVE	T	44 SF						
6	GREEN MOUNTAIN POWER CORPORATION		56+29 RT	57+82 RT											UTILITY
7	CHARTER COMMUNICATIONS, LLC		56+29 RT	57+82 RT											UTILITY
8	CONSOLIDATED COMMUNICATIONS OF VERMONT COMPANY, LLC		56+29 RT	57+82 RT											UTILITY
9	TOWN OF BARRE		56+29 RT	57+82 RT											UTILITY

TABLE OF REVISIONS

REVISION NO.	ROW SET SHEET #	DESCRIPTION	DATE

PROJECT NAME: BARRE TOWN
PROJECT NUMBER: BF 0169(12)

FILE NAME: NAME$DGN
PROJECT LEADER: T. MAHENDRARATNAM
DESIGNED BY: A. EGIZI
R.O.W. DETAIL SHEET

PLOT DATE: 1/14/2022
DRAWN BY: M. TROTTIER
CHECKED BY: A. PROULX
SHEET 47 OF 50

GENERAL NOTES:
1. BEARINGS ARE BASED ON MAGNETIC, 2015.
2. TOPOGRAPHIC INFORMATION DEVELOPED FROM A FIELD SURVEY USING A TOTAL STATION INSTRUMENT, 4/2015.
3. THE CONTRACTOR SHALL DETERMINE THE EXACT LOCATION OF ALL EXISTING UTILITIES BEFORE COMMENCING WORK, AND AGREES TO BE FULLY RESPONSIBLE FOR ANY AND ALL DAMAGES WHICH MIGHT BE OCCASIONED BY THE CONTRACTORS FAILURE TO EXACTLY LOCATE AND PRESERVE ANY AND ALL UNDERGROUND UTILITIES.
4. THE LOCATION OF EXISTING UNDERGROUND UTILITIES ARE SHOWN IN AN APPROXIMATE WAY ONLY AND HAVE NOT BEEN INDEPENDENTLY VERIFIED BY THE OWNER OR ITS REPRESENTATIVE.
5. ELEVATIONS ARE BASED ON N.A.V.D 88 DATUM. HORIZONTAL POSITIONS ARE BASED ON AN ARBITRARY COORDINATE SYSTEM.
6. CONTRACTORS SHALL COORDINATE WITH DIG-SAFE (1-888-344-7233) A MINIMUM OF 48 HOURS PRIOR TO ANY EXCAVATION. DIG-SAFE SHALL BE NOTIFIED "FOR EXCAVATION ACTIVITIES CONDUCTED WITHIN 100 FEET OF AN UNDERGROUND UTILITY FACILITY." CONTRACTOR SHALL "PREMARK PROPOSED EXCAVATION AREAS BEFORE CALLING DIG-SAFE."
7. THE PROPERTY LINES, EASEMENTS, AND OTHER REAL PROPERTY DESCRIPTIONS PROVIDED IN THIS PERMIT APPLICATION DO NOT DEFINE LEGAL RIGHTS OR MEET LEGAL REQUIREMENTS FOR A LAND SURVEY AND SHALL NOT BE USED IN LIEU OF A SURVEY AS THE BASIS OF ANY LAND TRANSFER OR ESTABLISHMENT OF ANY PROPERTY RIGHT.

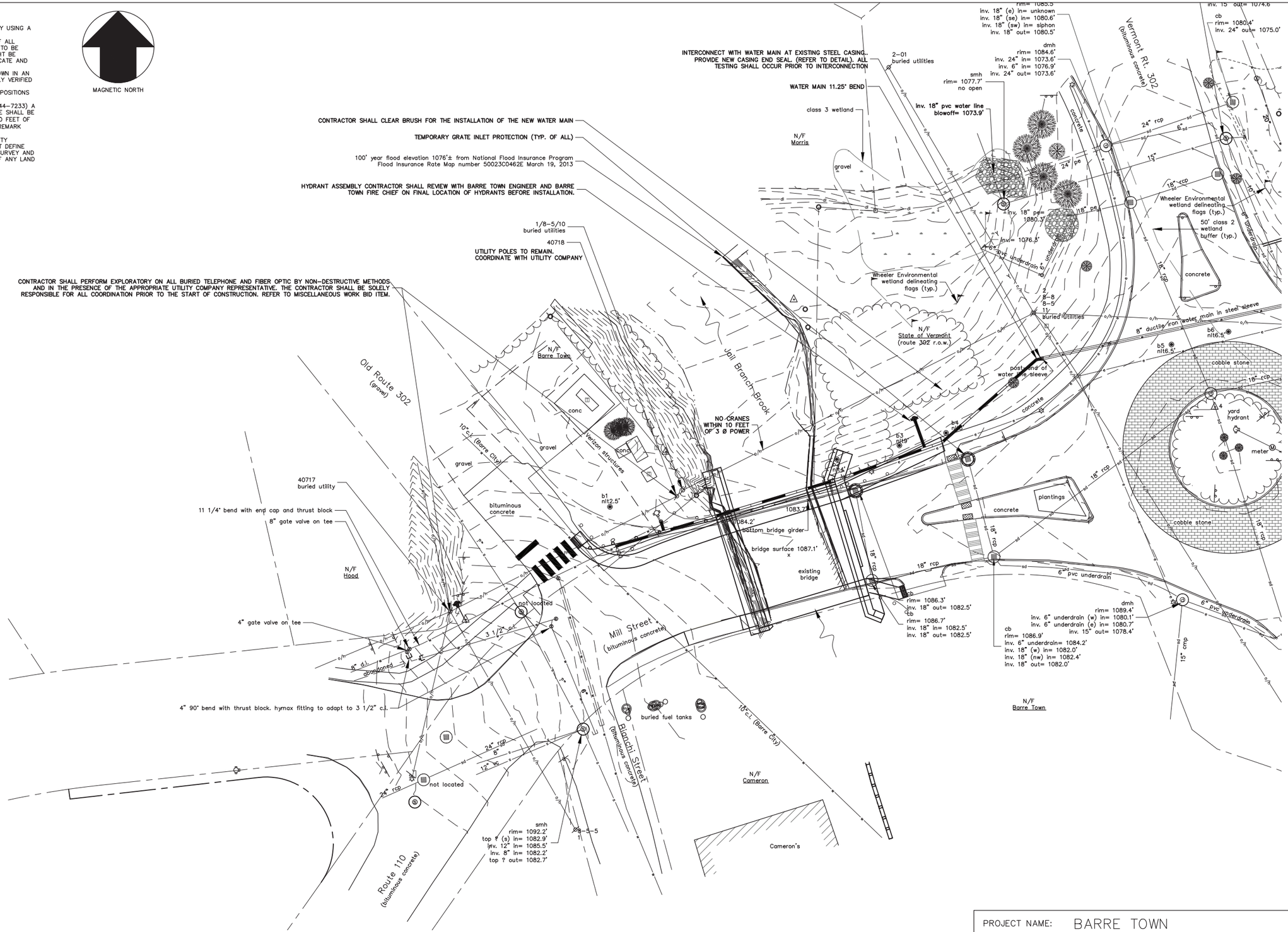

PROJECT NAME: BARRE TOWN	
PROJECT NUMBER: BF 0169(12)	
FILE NAME:	PLOT DATE: 1/10/2022
PROJECT LEADER: R. CLARK	DRAWN BY: R. ROOKER
DESIGNED BY: R. CLARK	CHECKED BY:
WATER MAIN PLAN SHEET	SHEET OF

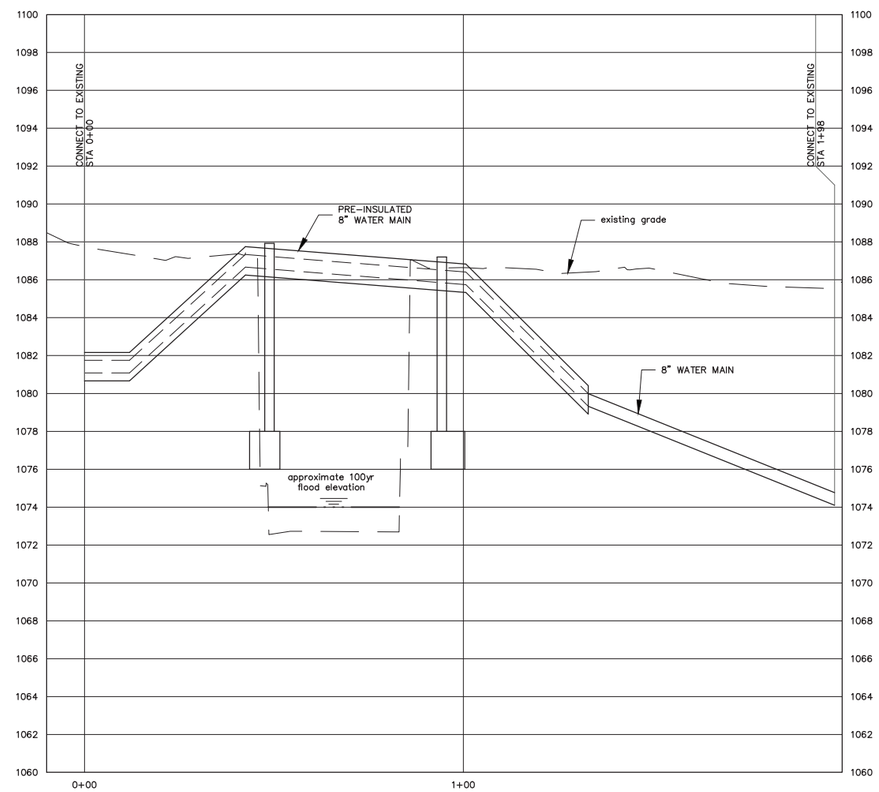

WATER MAIN PROFILE

SCALE: 1"=20' HORIZONTAL
1"=4' VERTICAL

PROJECT NAME: BARRE TOWN	
PROJECT NUMBER: BF 0169(12)	
FILE NAME:	PLOT DATE: 1/10/2022
PROJECT LEADER: R. CLARK	DRAWN BY: R. ROOKER
DESIGNED BY: R. CLARK	CHECKED BY:
WATER MAIN PROFILE SHEET	SHEET OF

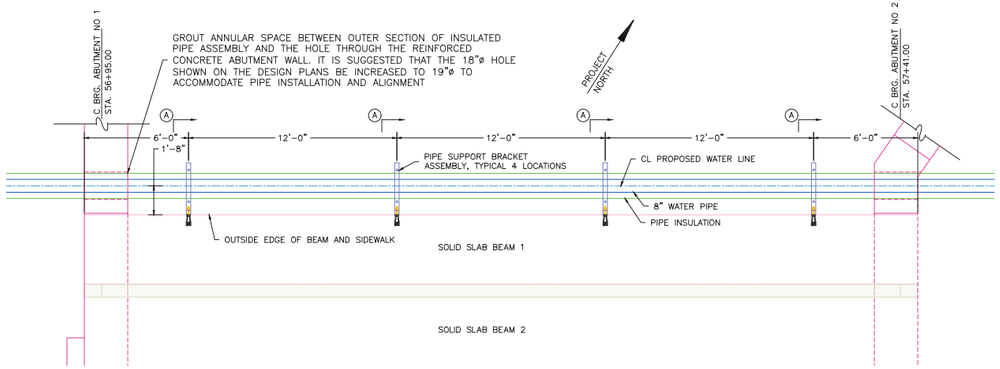

PARTIAL DECK PLAN
EXCERPT FROM CONTRACT DRAWING PLAN 28

SCALE 1/4"=1'-0"

0' 2' 4' 6' 8'

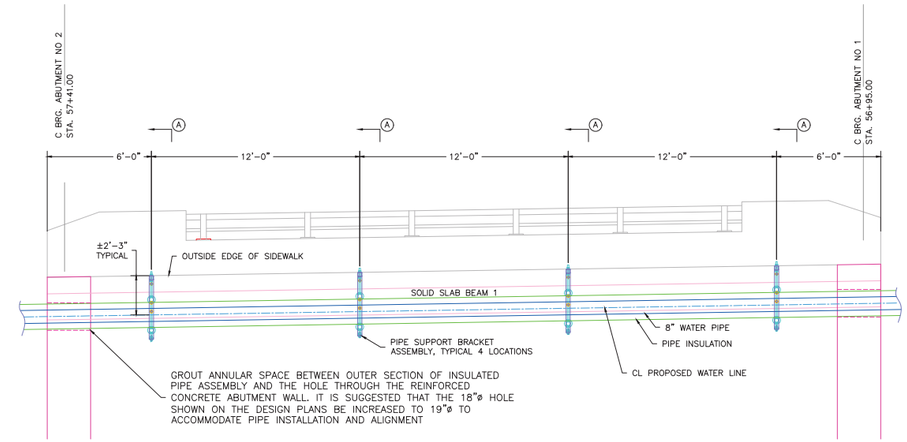

PARTIAL DECK ELEVATION – LOOKING UPSTREAM AT WATER LINE

SCALE 1/4"=1'-0"

0' 2' 4' 6' 8'

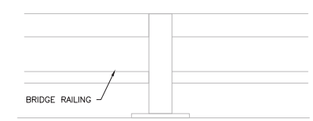

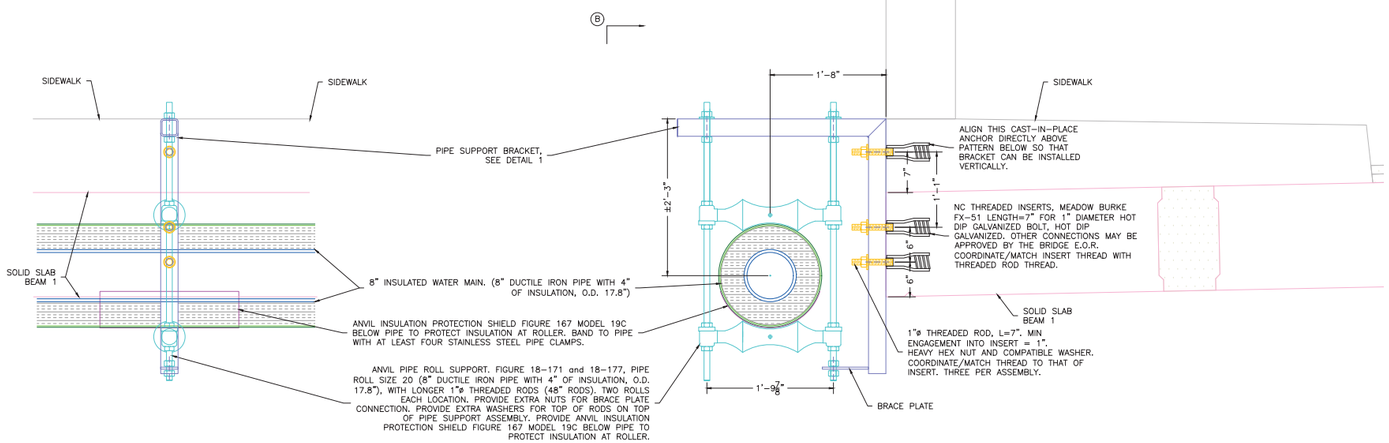

SECTION B–B – SIDE VIEW AT TYPICAL PIPE SUPPORT ASSEMBLY

BRIDGE SLOPE NOT SHOWN IN DETAIL, INSTALL UTILITY SUPPORT BRACKET VERTICALLY AT EACH LOCATION. PIPE IS TO BE ALIGNED TO MATCH BRIDGE SLOPE.

SECTION A–A – END VIEW AT TYPICAL PIPE SUPPORT ASSEMBLY

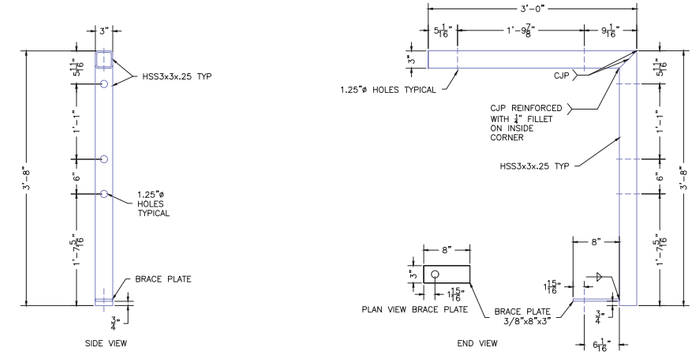

DETAIL 1 – PIPE SUPPORT BRACKET

GENERAL NOTES:

(1) STRUCTURAL STEEL TO BE COMPLETED IN ACCORDANCE WITH VTRANS STANDARD SPECIFICATIONS FOR CONSTRUCTION 2011 EDITION (VTRANS SSC) SECTION 506 AND CORRESPONDING SECTIONS OF SECTION 714.
(1)1) STRUCTURAL STEEL PLATE SHOWN TO BE ASTM A36.
(1)2) STRUCTURAL STEEL TUBING (HSS MEMBERS) TO BE ASTM A500 GRADE B.
(1)3) THREADED RODS ARE TO BE ASTM A36, 1" DIAMETER, HOT DIP GALVANIZED, WITH COMPATIBLE WASHERS AND HEAVY HEX ASTM A563 NUTS.
(1)4) ALL NEW STEEL MATERIAL AND ASSEMBLIES SHOWN ARE TO BE HOT DIP GALVANIZED AFTER FABRICATION, PER AASHTO M111.
(2) BRIDGE CAMBER AND SLOPE ARE NOT SHOWN. ADJUST SUPPORT ELEVATIONS AS NECESSARY TO MAINTAIN STRAIGHT PIPE ALIGNMENT.
(3) FOR THE PIPE ROLL SUPPORT ASSEMBLIES SHOWN, USE LOCTITE THREAD LOCKER ON THE EXTERIOR NUTS OR DETENT THE THREADS BEYOND THE OUTER NUTS SO THAT THE ASSEMBLY CANNOT VIBRATE LOOSE.
(4) NEW UTILITIES TO BE SUFFICIENTLY CONNECTED TO EXISTING ABUTMENTS SO THAT THEY CANNOT MOVE DOWNWARD OR EXERT LONGITUDINAL OR LATERAL FORCE ON UTILITY SUPPORT HANGERS. SEE CIVIL DRAWINGS FOR ADDITIONAL DETAILS.
(5) NEW UTILITIES TO HAVE SUFFICIENT JOINTS AND CONNECTIONS TO RESTRAIN INTERNAL FORCES AND TO RESOLVE EXPANSION AND CONTRACTION FORCES. SEE CIVIL DRAWINGS FOR ADDITIONAL DETAILS.
(6) ELEVATIONS SHOWN ARE FROM THE BRIDGE AS-BUILT RECORD PLANS AND ARE SHOWN FOR RELATIVE REFERENCE ONLY, THEY DO NOT MATCH THE ELEVATIONS SHOWN ON THE CIVIL PLANS. FIELD MEASURE AND ADJUST AS NECESSARY.
(7) PIPE SECTIONS ARE TO BE ADJUSTED SO THAT JOINTS ARE LOCATED WITHIN 2 FEET OF A SUPPORT.
(8) COMPLETELY FILL ANNULAR SPACE BETWEEN OUTER SECTION OF INSULATED PIPE ASSEMBLY AND THE HOLE THROUGH THE REINFORCED CONCRETE ABUTMENT WALL. USE SIKAGROUT 212. IT IS SUGGESTED THAT THE 18"ø HOLE SHOWN ON THE DESIGN PLANS BE INCREASED TO 19"ø TO ACCOMMODATE PIPE INSTALLATION AND ALIGNMENT.

STATE OF VERMONT
DAVID HUNTINGTON
01/11/22
NO. 6928
STRUCTURAL
LICENSED
PROFESSIONAL ENGINEER

Barre - Pipe Support Assembly

PIPE SUPPORT ASSEMBLY DESIGN BY:
Project Partner:

HERITAGE ENGINEERING

Heritage Engineering, P.C.
P.O. Box 255
7290 VT Route 131, Suite 4A
Perkinsville, VT 05151
Ph/Fax (802) 263-5400
heritageengineering@tds.net
www.heritageengineeringvt.com

PROJECT NAME: BARRE TOWN	
PROJECT NUMBER: BF 0169(12)	
FILE NAME:	PLOT DATE: DATE
PROJECT LEADER: R. CLARK	DRAWN BY: R. ROOKER
DESIGNED BY: R. CLARK	CHECKED BY: R. ROOKER
SHEET TITLE	SHEET ## OF ##